onshape™

Step-by-Step Tutorial

The Stirling Engine – by TooTallToby



NOTE: This document is meant to function as a companion to the video tutorial published by TooTallToby in April of 2024 and not as a stand-alone document.

NEW DOCUMENT & SHORTCUT KEYS

1. Visit **Onshape.pro/TooTallToby** to create a new account
   Sign up your engineering/design team to try Onshape Professional for 6 months for free!

   - OR -

   Sign into your existing Onshape account

2. Create a new document in ONSHAPE called “Stirling Engine 2024”

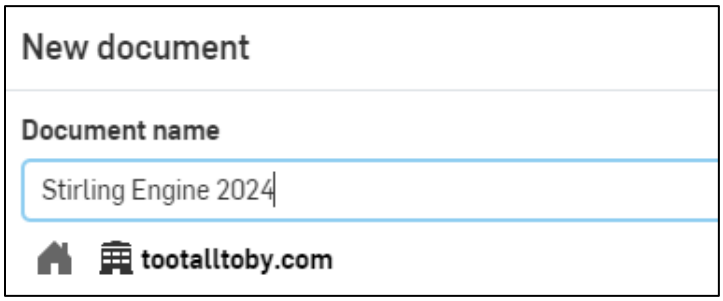

3. **4 time-saving shortcuts** we’ll be using throughout this tutorial

   a. 

   The “S” key brings up a useful SHORTCUT menu
   Toby’s Video from March 2023 - https://www.youtube.com/watch?v=qdRPOJ9U6KY

   b. **Using Auto Dimensions**
   Toby’s Video from August 2023 - https://www.youtube.com/watch?v=BmBK_9H5BaU

   c. 

   Using “N” for “Normal To”
   Pressing N changes the sketch plan to be perpendicular to your line of sight (aka “Normal To”)

   d. 

   Using “Q” to toggle for construction geometry
   Toby’s Video from May 2023 - https://www.youtube.com/watch?v=mnIwvlvuGaA

LOWER PLATE

1. Create this sketch on the top plane:

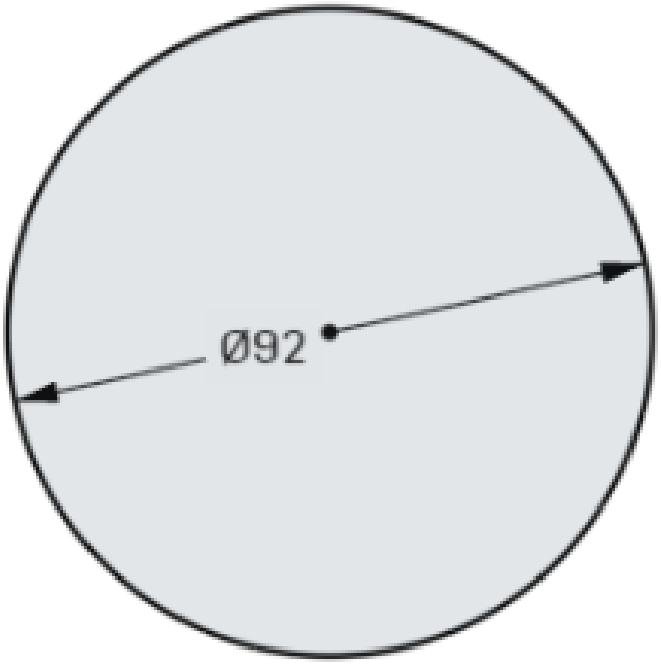

2. Create an **EXTRUDE** using the option **NEW**
   Set the END TYPE to **BLIND** with a depth of 2mm

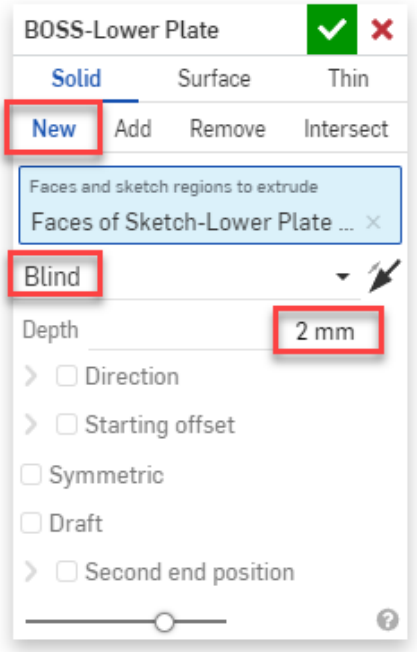

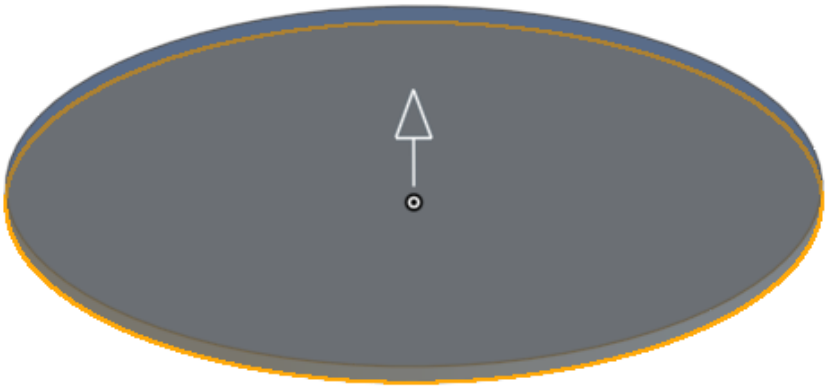

3. Create this sketch on the upper surface of this disc

   Use the OFFSET  command to offset the outer circular edge by 3mm

   Sketch a 2mm circle **horizontal** to the origin and **coincident** to this offset circle
   Change the offset to circle to CONSTRUCTION

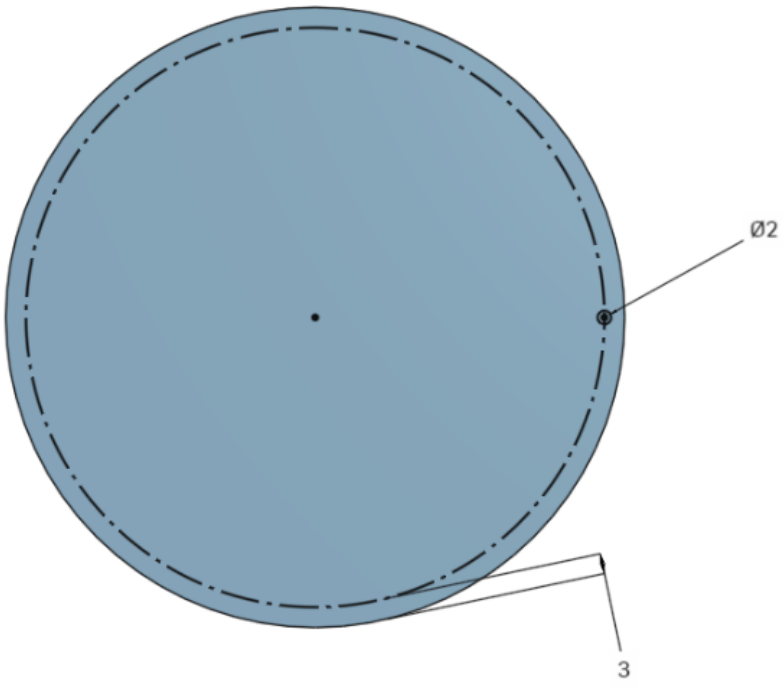

4. Create an **EXTRUDE** using the option **REMOVE**
   Set the END TYPE to **THROUGH ALL**

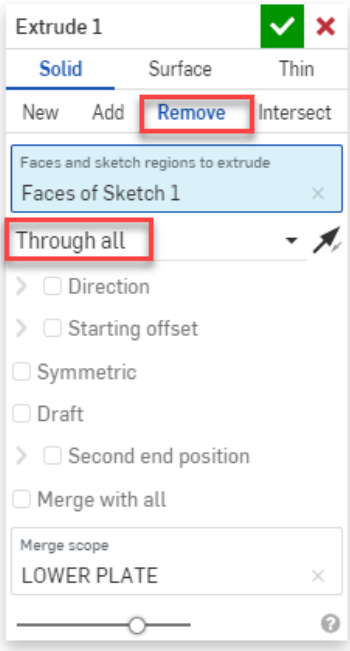

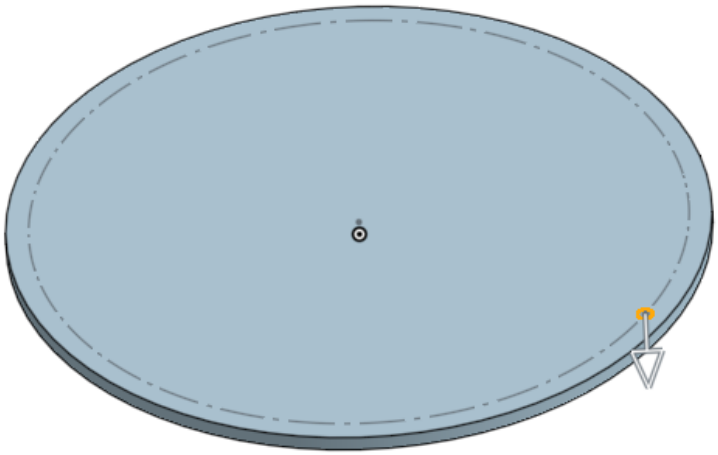

5. Create a **CIRCULAR PATTERN** using the option **Feature Pattern**
   Select the HOLE we created in the previous step as the **Features to Pattern**
   Select the outer circular edge as the **Axis of Pattern**
   Set the **Instance Count** to **6**

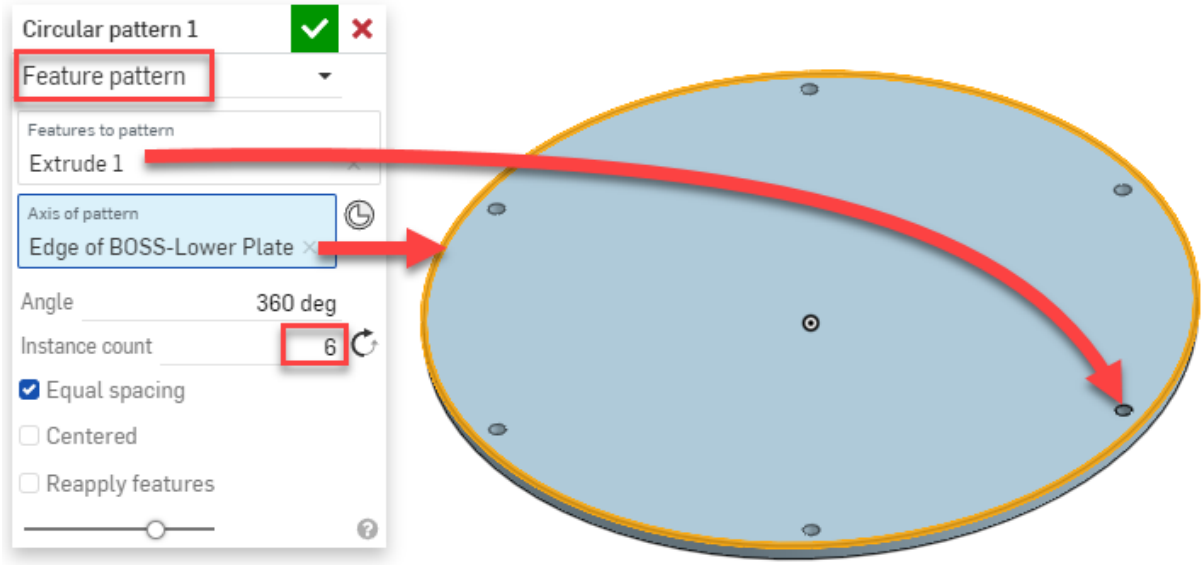

6. Create a **FILLET** using the option **EDGE**
   Select the upper and lower edges of the circular plate
   Set Radius value to **0.6mm**

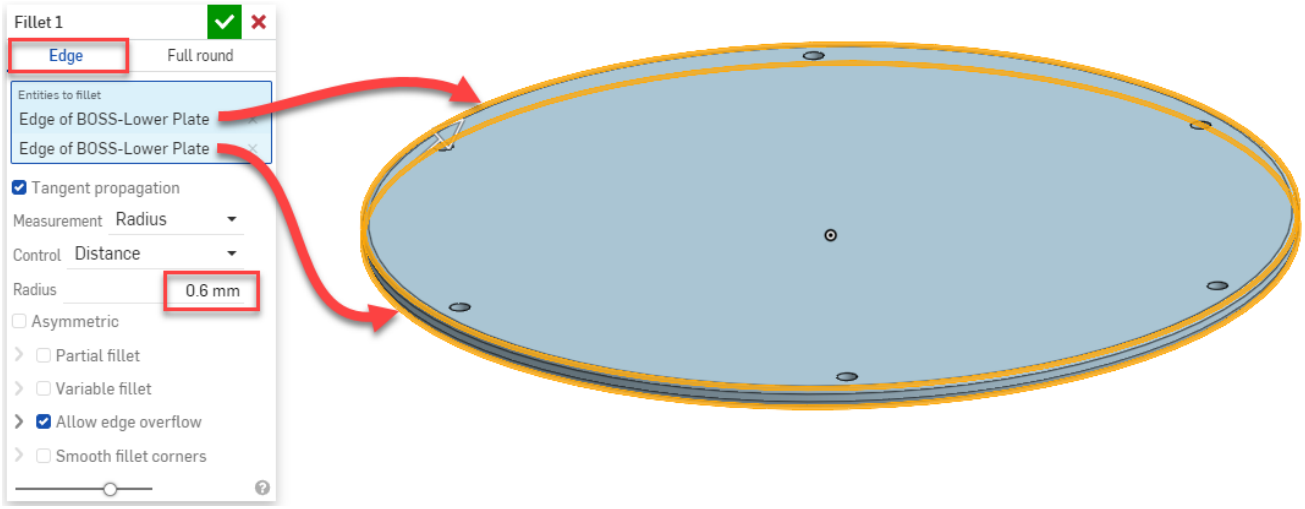

7. **RENAME** the part in the Part Studio to LOWER PLATE



8. RMB on the name LOWER PLATE and choose **ASSIGN MATERIAL**
   Assign the material named “Aluminum”

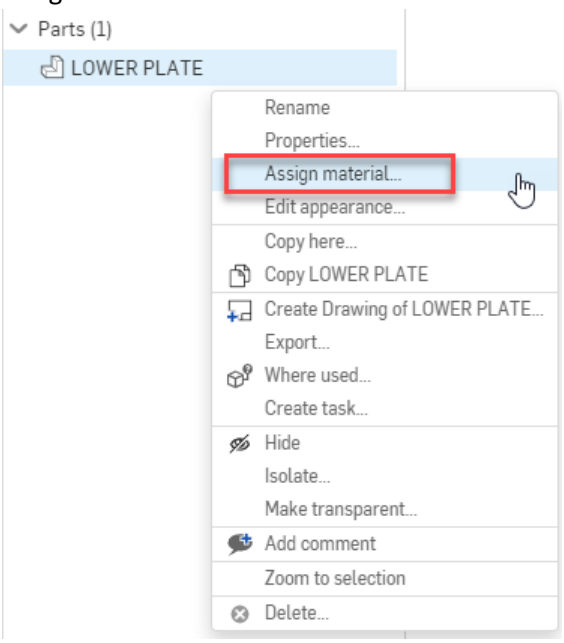

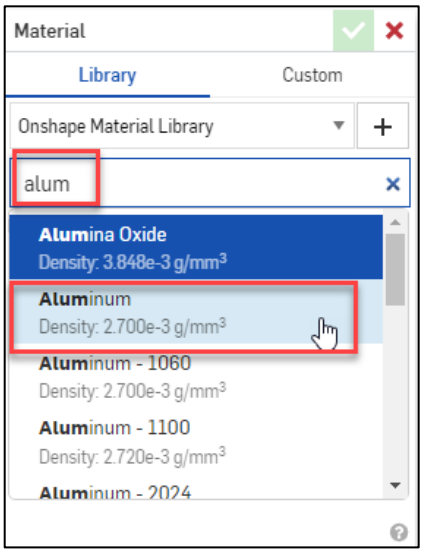

9. RMB on the name LOWER PLATE and choose **EDIT APPEARANCE**
   Assign an appearance of DARKISH BLUE

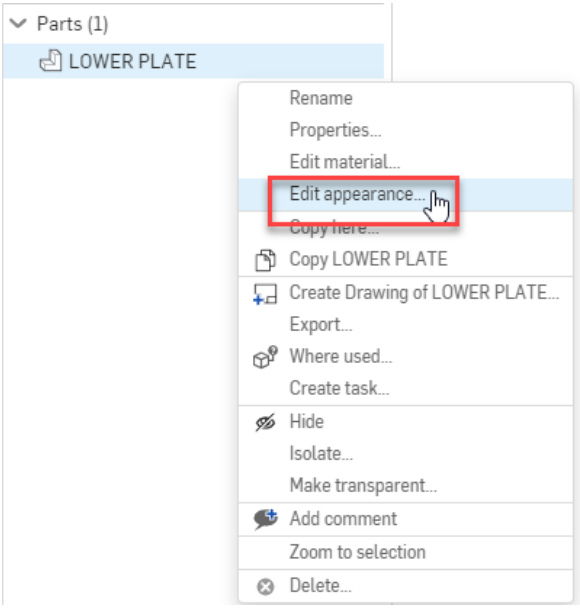

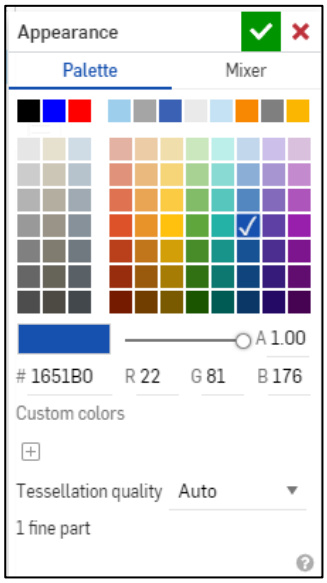

UPPER PLATE

1. **Select** the original sketch we used to create the lower plate
   Create an **EXTRUDE** using the option **NEW**
   Use the option for **STARTING OFFSET** and set the distanced to 24mm (above the origin)
   Set the END TYPE to **BLIND** with a depth of 2mm in a DOWNWARD direction

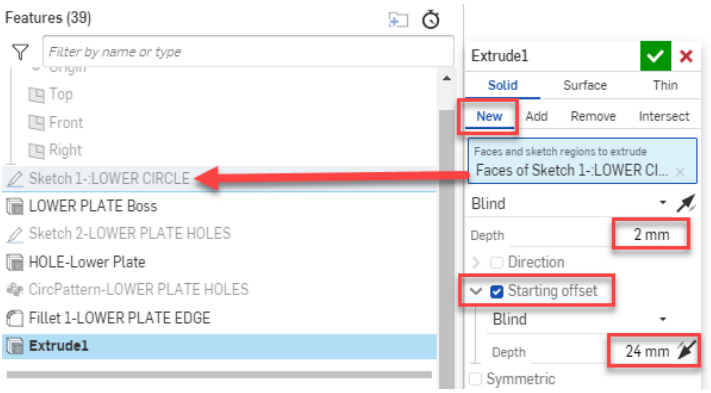

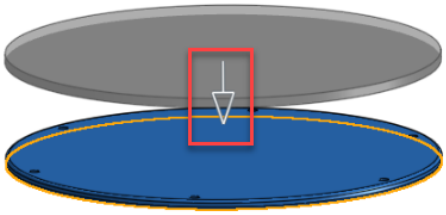

2. **RENAME** this part to UPPER PLATE

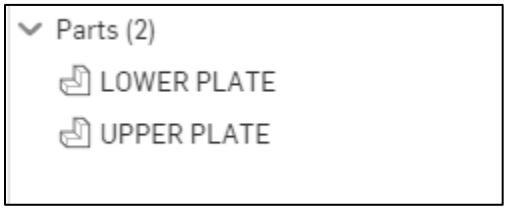

3. Create this **SKETCH** on the UPPER PLATE of a 3mm diameter circle
   Assign a **CONCENTRIC** sketch relationship to one of the holes in the LOWER PLATE

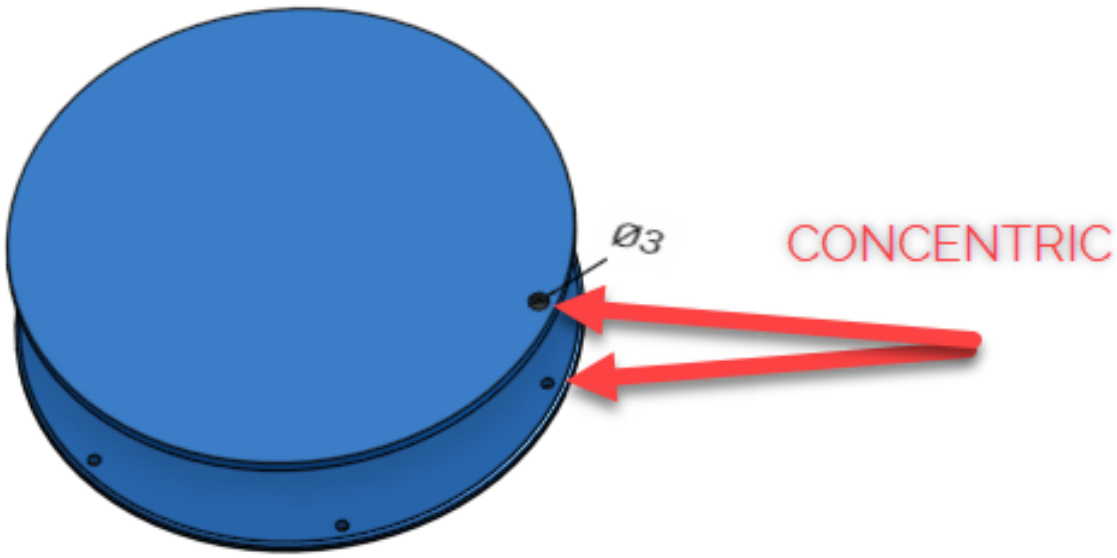

4. Create an **EXTRUDE** using the option **REMOVE**
   Set the END TYPE to **THROUGH ALL**
   Set the **MERGE SCOPE** to only include the UPPER PLATE

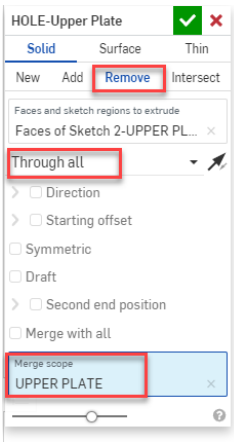

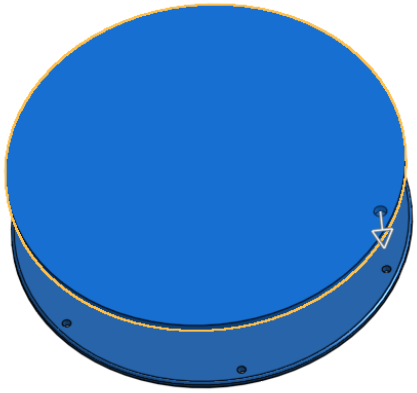

5. Create a **CIRCULAR PATTERN** using the option **Feature Pattern**
   Select the HOLE we created in the previous step as the **Features to Pattern**
   Select the outer circular edge as the **Axis of Pattern**
   Set the **Instance Count** to **6**

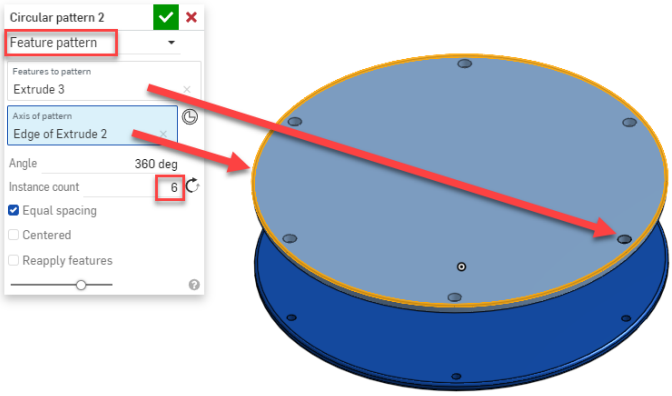

6. Create a **FILLET** using the option **EDGE**
   Select the cylindrical face running around the outside of the upper plate
   Set Radius value to **0.6mm**

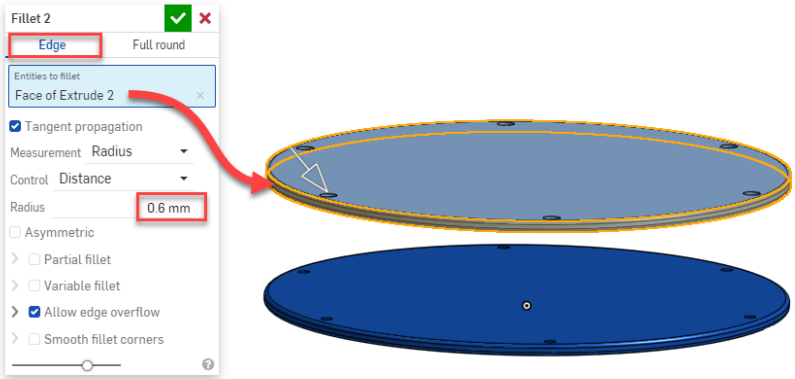

7. RMB on the name UPPER PLATE and choose **ASSIGN MATERIAL**
   Assign the material named “Aluminum”

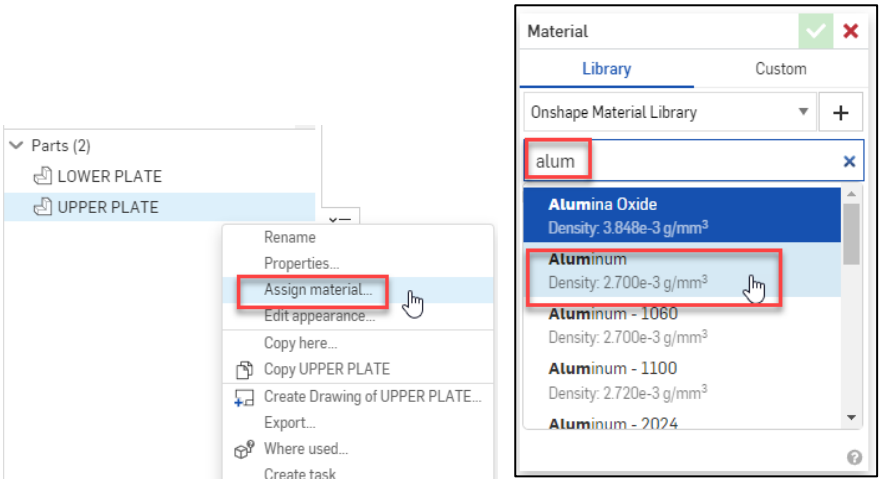

8. RMB on the name UPPER PLATE and choose **EDIT APPEARANCE**
   Assign an appearance of MEDIUM BLUE

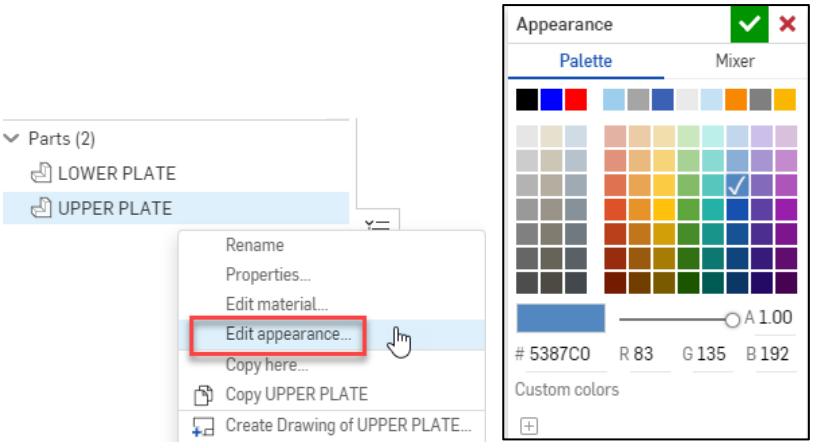

We now have 2 parts in our Part Studio

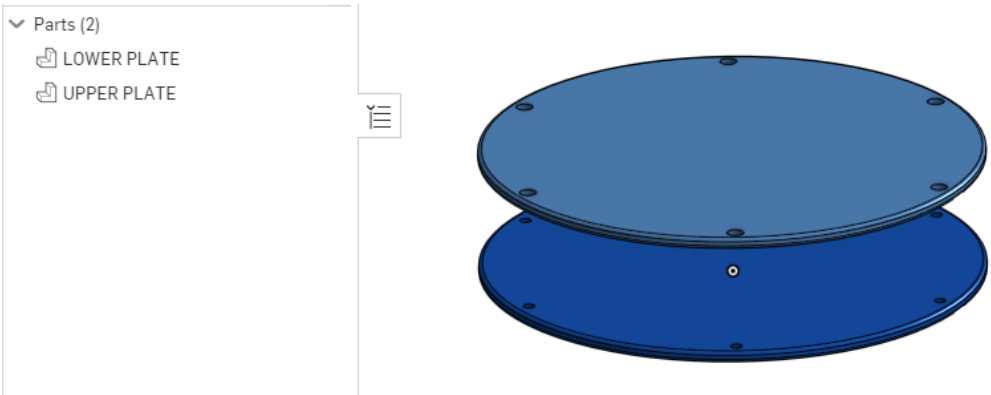

GLASS SLEEVE

1. Create this **SKETCH** on the upper face of the LOWER PLATE
   Create a 79mm diameter circle on the origin
   Use the OFFSET command to offset the circle INWARD by 1.5mm

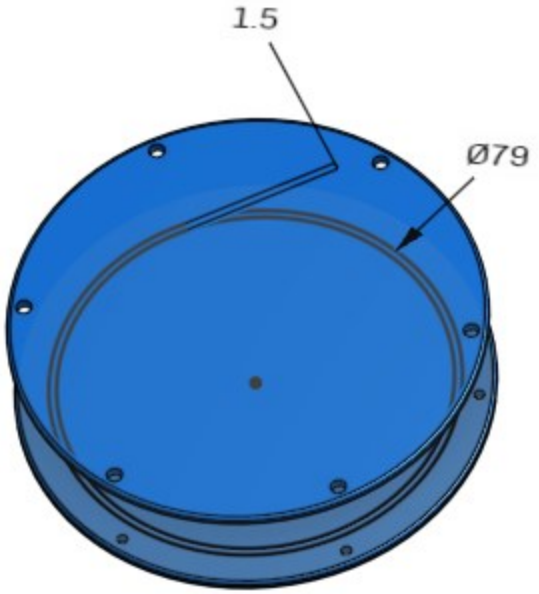

2. Create an **EXTRUDE** using the option **NEW**
   Set the END TYPE to **UP TO FACE** and select the lower face of the UPPER PLATE

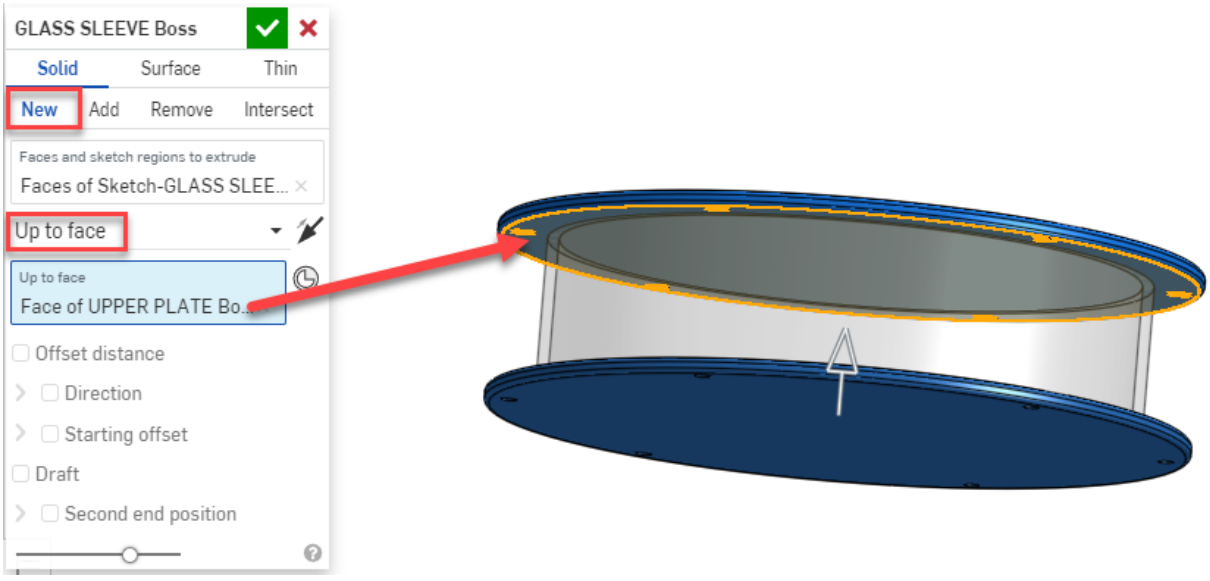

3. **RENAME** this part to GLASS SLEEVE

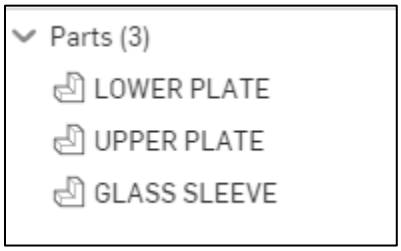

4. RMB on the name GLASS SLEEVE and choose **ASSIGN MATERIAL**
   Assign the material named "Glass"

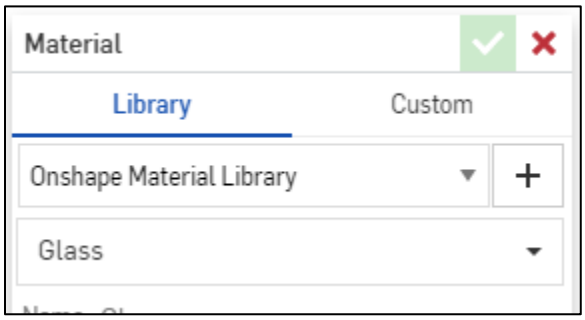

5. RMB on the name GLASS SLEEVE and choose **EDIT APPEARANCE**
   Choose a light grey or white color, and slide the TRANSPARENCY slide to about 30% appearance

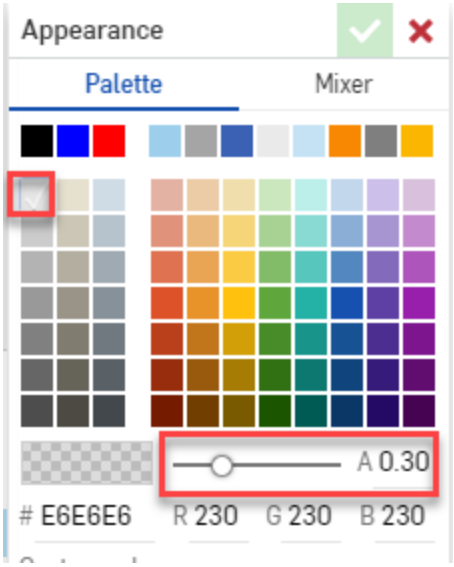

NOTE: You should continue assigning MATERIALS and COLORS to your parts.

However, for the remainder of this document we will not specify which materials or colors to use for each part.

LOWER PINS

1. Create a **NEW Part Studio**
   Use the PLUS (+) sign in the lower left to create a NEW PART STUDIO

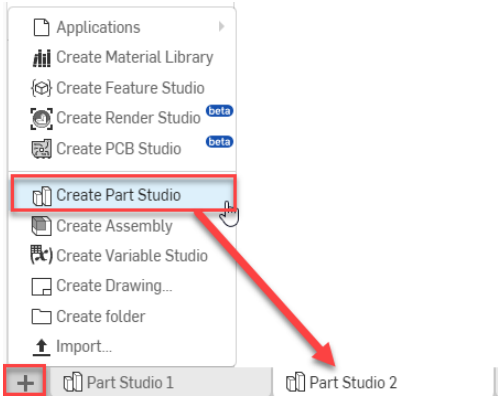

2. **RENAME** this part studio to PINS



3. Create this **SKETCH** on the FRONT PLANE
   Use auto-dimensions and create the following geometry:

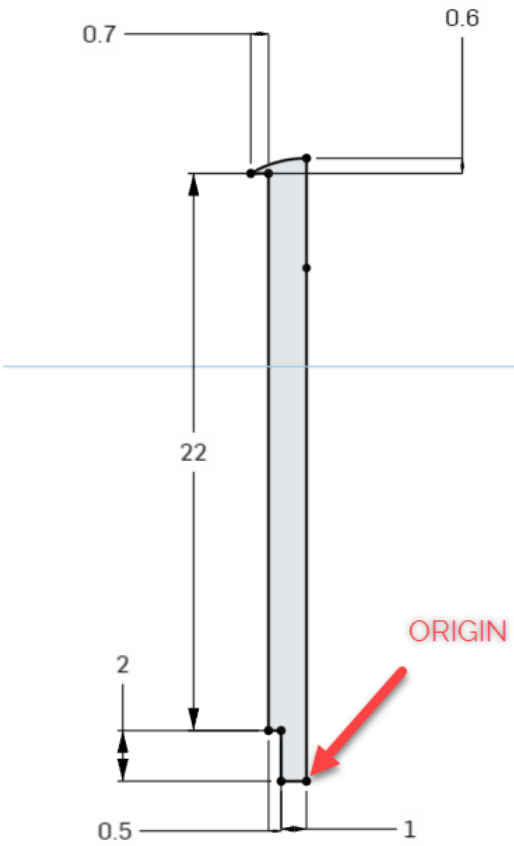

4. Create a CENTERLINE by sketching a line and press Q

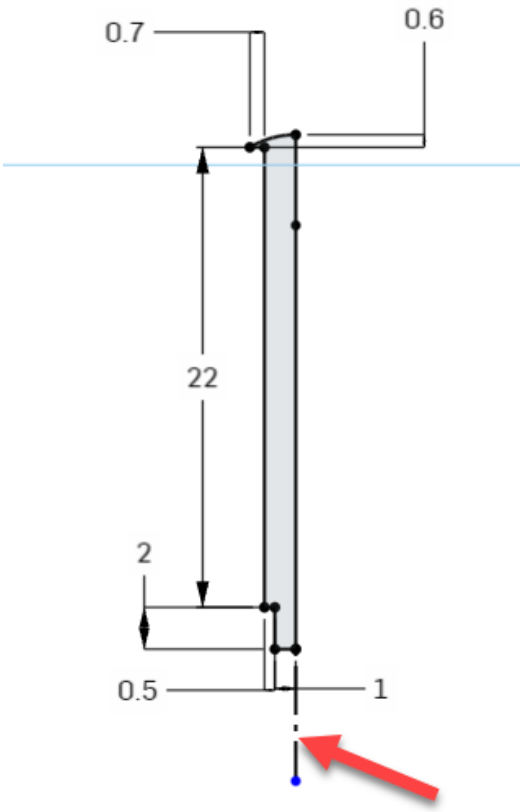

5. Delete the 3 horizontal dimensions and replace them with DOUBLED DIMENSIONS, using the centerline

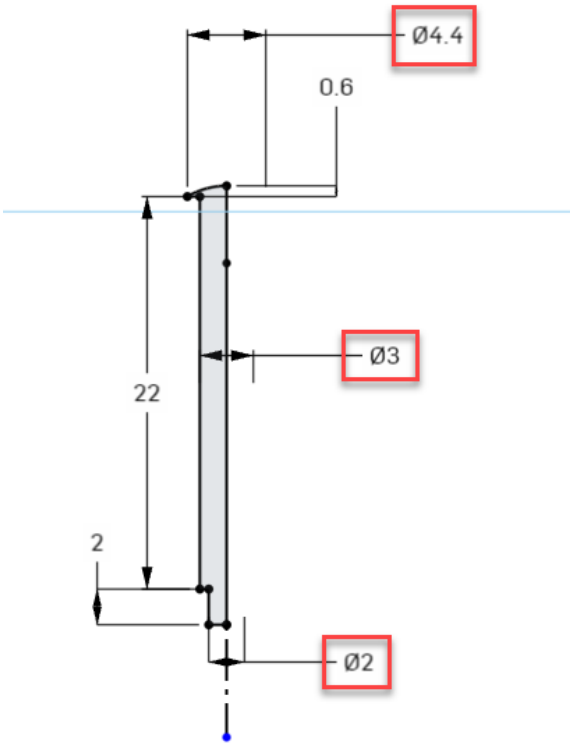

6. Create a **REVOLVE** using the option **NEW**
   Select the lower line as the **Revolve Axis**

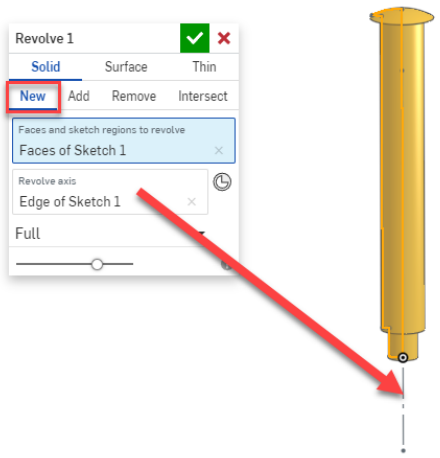

7. **RENAME** this part to LOWER PIN



8. Edit the appearance of this part to assign a “brassy” color

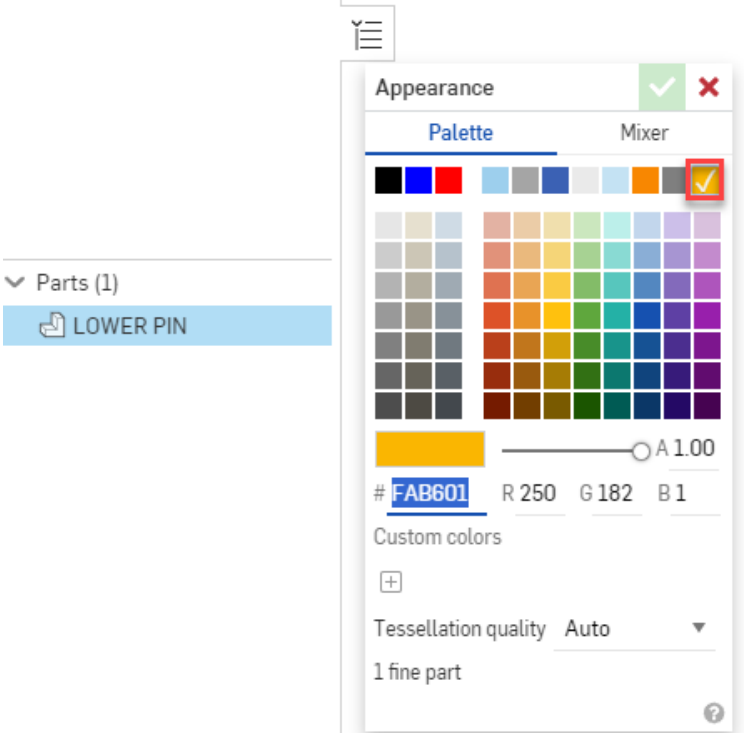

DISPLACER & DISPLACER ROD

1. Create a **NEW Part Studio**
   Use the PLUS (+) sign in the lower left to create a NEW PART STUDIO

2. **RENAME** this part studio to DISPLACER



3. Create this **SKETCH** on the FRONT PLANE using 2 rectangles and 2 centerlines:

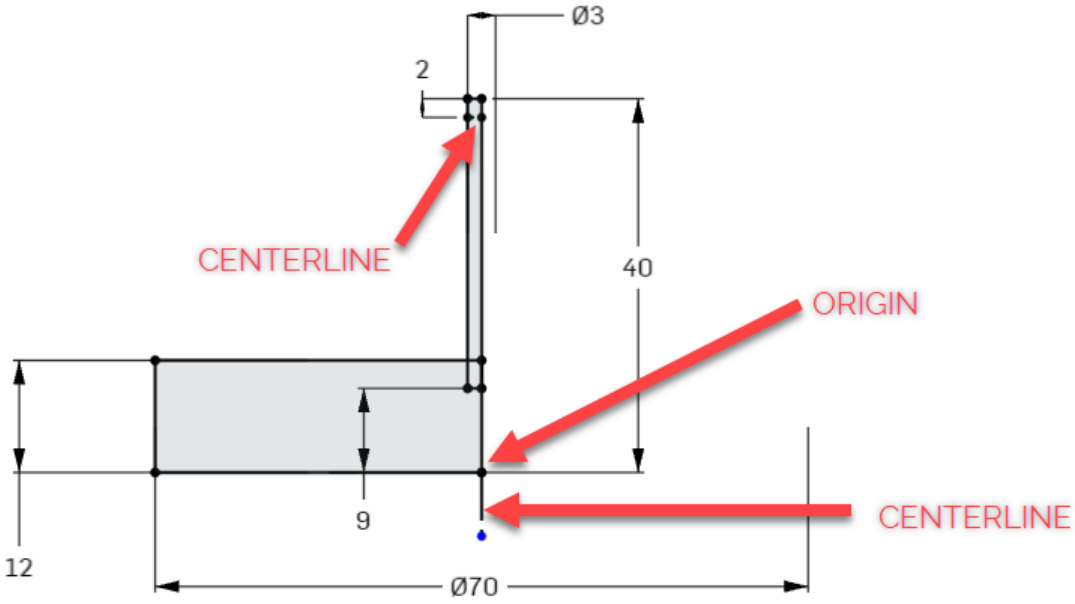

4. Create a **REVOLVE** using the option **NEW**
   Select ONE REGION of the previous sketch for the **Faces and sketch regions to revolve**
   Select the lower line as the **Revolve Axis**

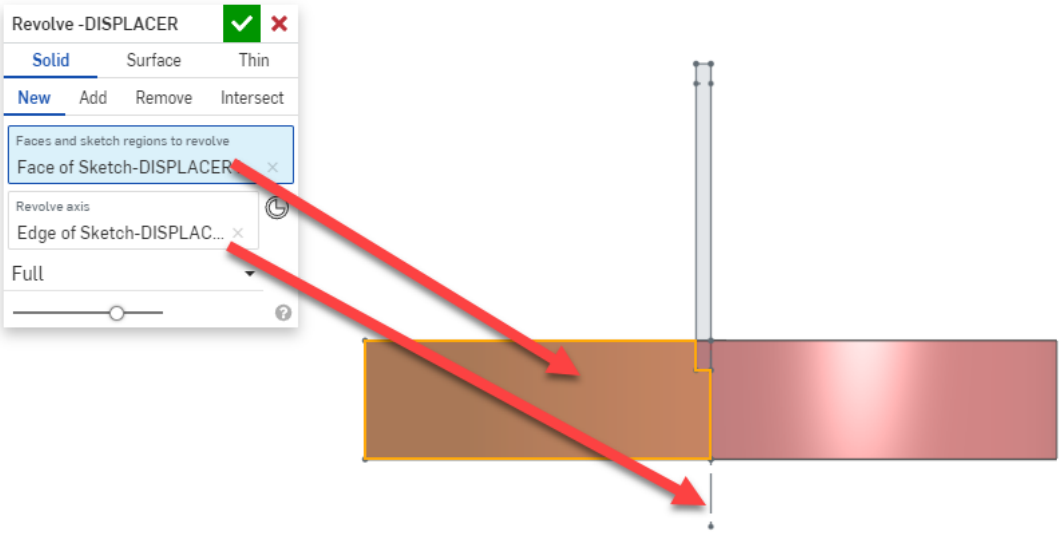

5. Create a **CHAMFER** using the option **EQUAL DISTANCE**
   Select the top and bottom edges of the disc
   Select the distance to **3 mm**

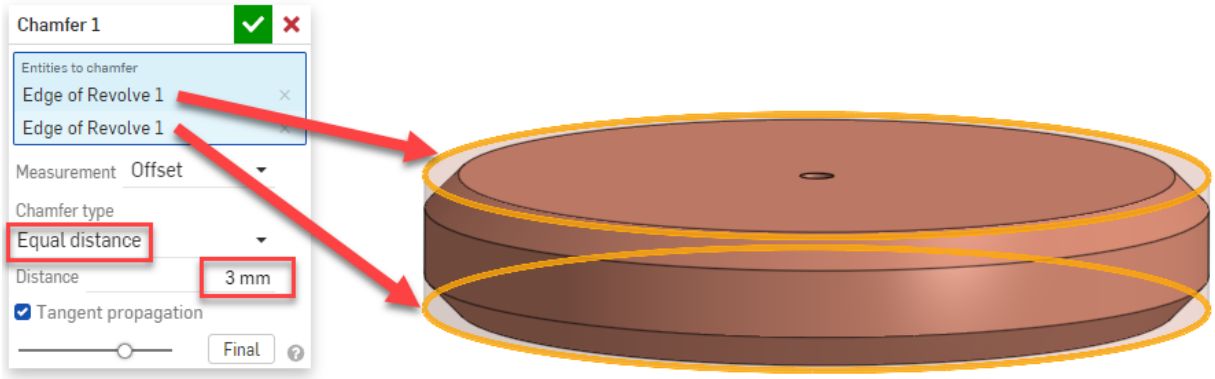

6. Rename this part DISPLACER

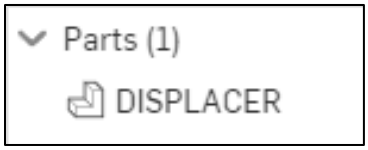

7. Show the sketch used earlier for REVOLVE

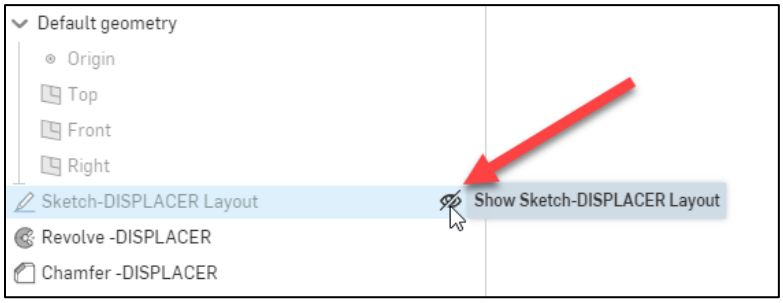

8. Create a **REVOLVE** using the option **NEW**
   Select TWO REGIONS of the previous sketch for the **Faces and sketch regions to revolve**
   Select the lower line as the **Revolve Axis**

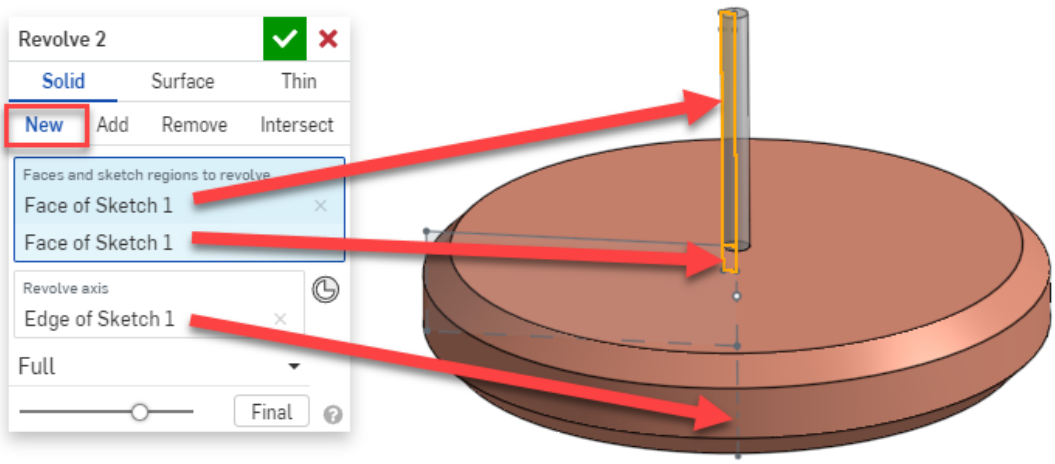

9. Create a **SKETCH** on the RIGHT PLANE
   Sketch a 2mm diameter circle and locate this circle based on the upper centerline from the original sketch

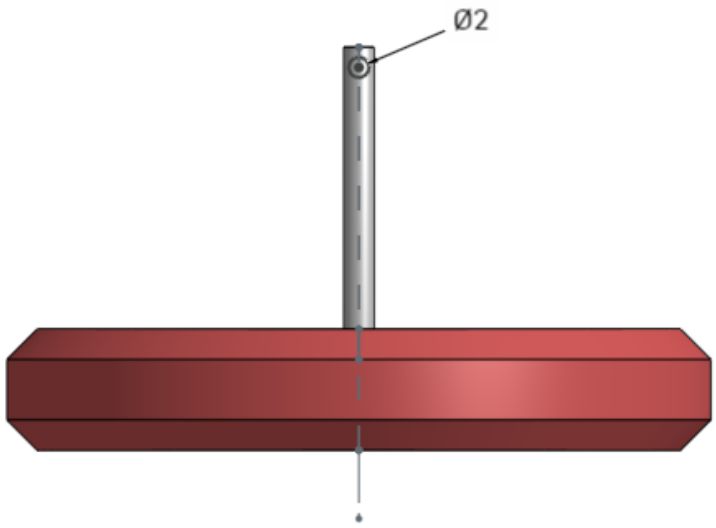

10. Create an **EXTRUDE** using the option **REMOVE**
    Set the END TYPE to **THROUGH ALL**
    Use the option for **SYMMETRIC**
    Set the MERGE SCOPE to include ROD-Displacer

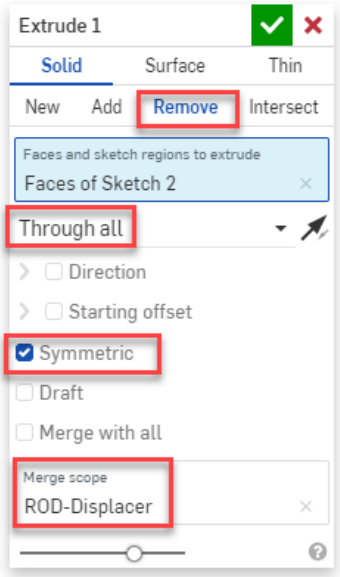

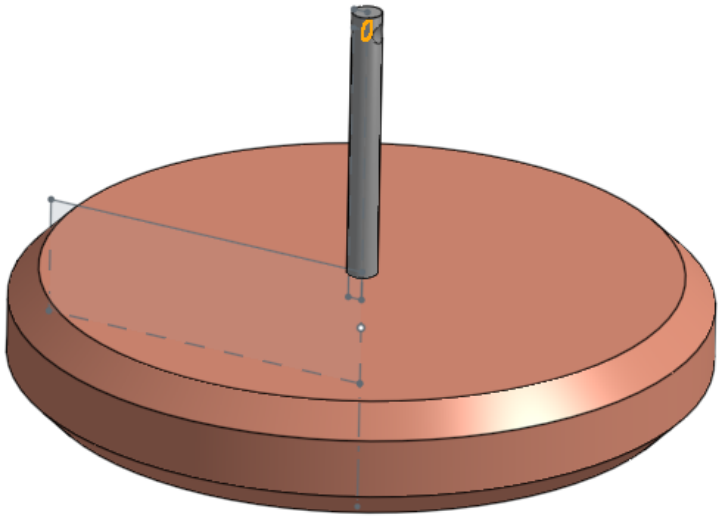

11. **RENAME** this part to ROD-Displacer

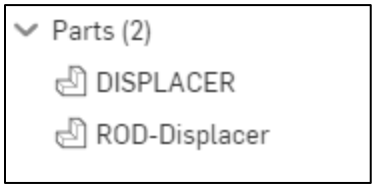

MAIN MECHANISM

1. Return to the first tab named “Part Studio 1”
   RENAME this tab to MAIN MECHANISM



2. Create a **SKETCH** on the top face of the UPPER PLATE using the following geometry

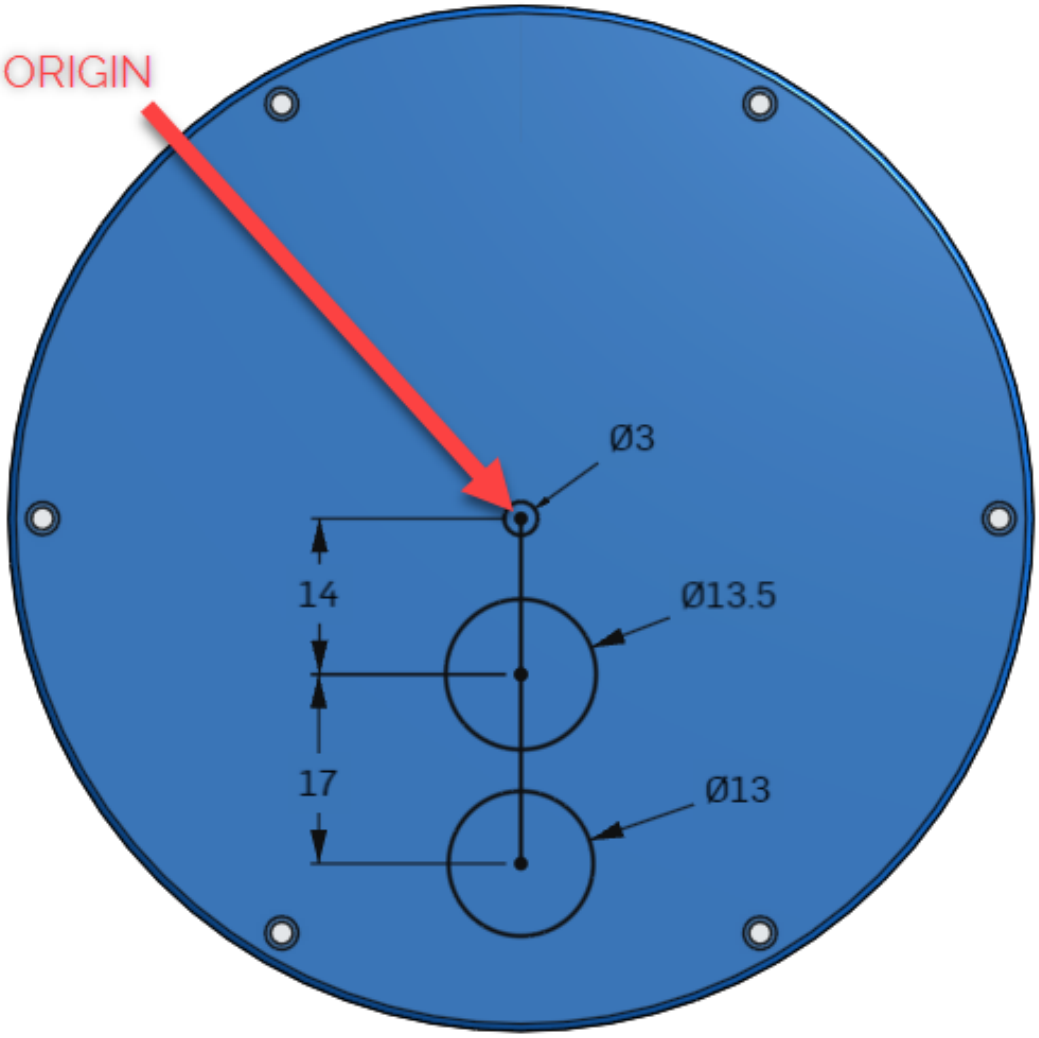

3. Create an **EXTRUDE** using the option **REMOVE**
   Select the 2 circles (shown in image) as the **Faces and sketch regions to extrude**
   Set the END TYPE to **THROUGH ALL**
   Set the MERGE SCOPE to include the UPPER PLATE

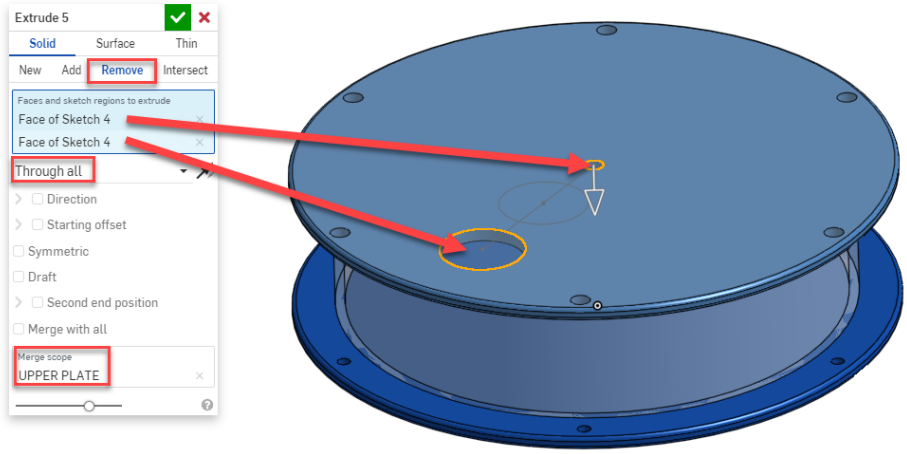

4. SHOW the sketch used in the previous step

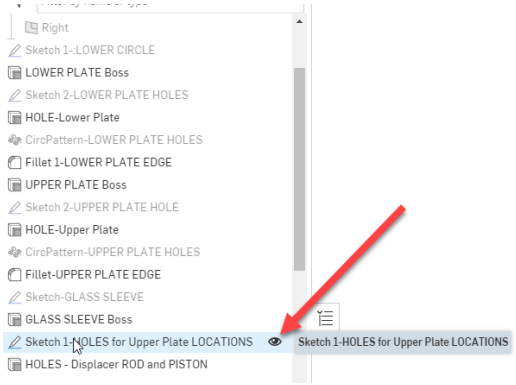

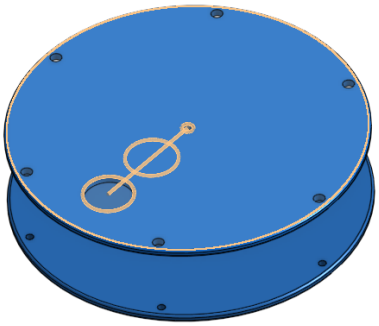

5. Create an **EXTRUDE** using the option **REMOVE**
   Select the 2 semi-circles (shown in image) as the **Faces and sketch regions to extrude**
   Set the END TYPE to **BLIND** with a depth of 1mm

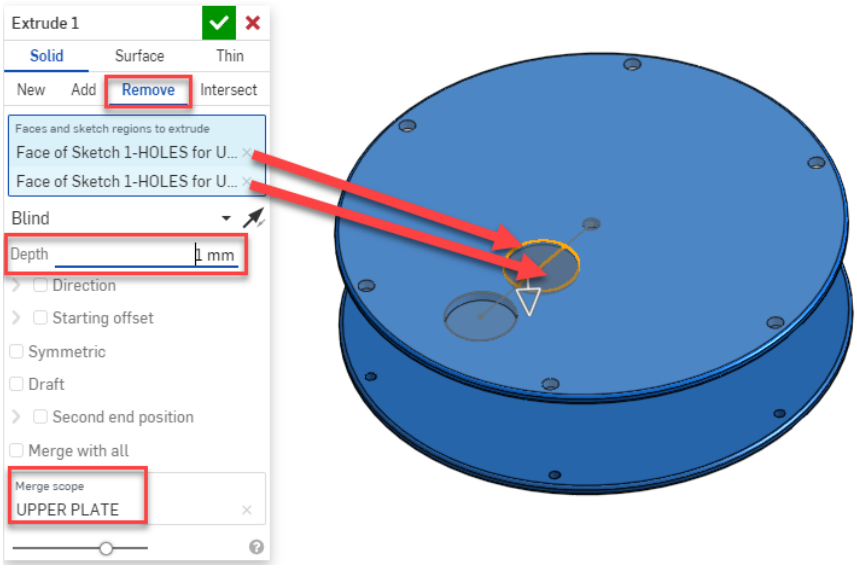

LAYOUT SKETCH

1. Create a **SKETCH** on the RIGHT PLANE
   This will be a LAYOUT SKETCH used for the geometry of 5 different parts

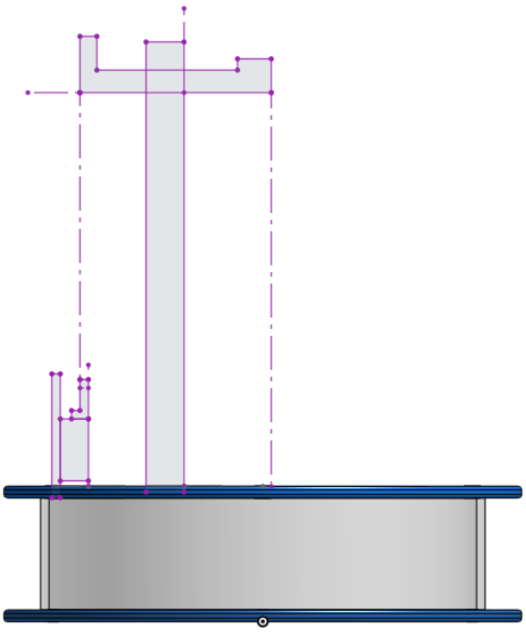

We will zoom highlight different areas of this sketch in the following set of images:

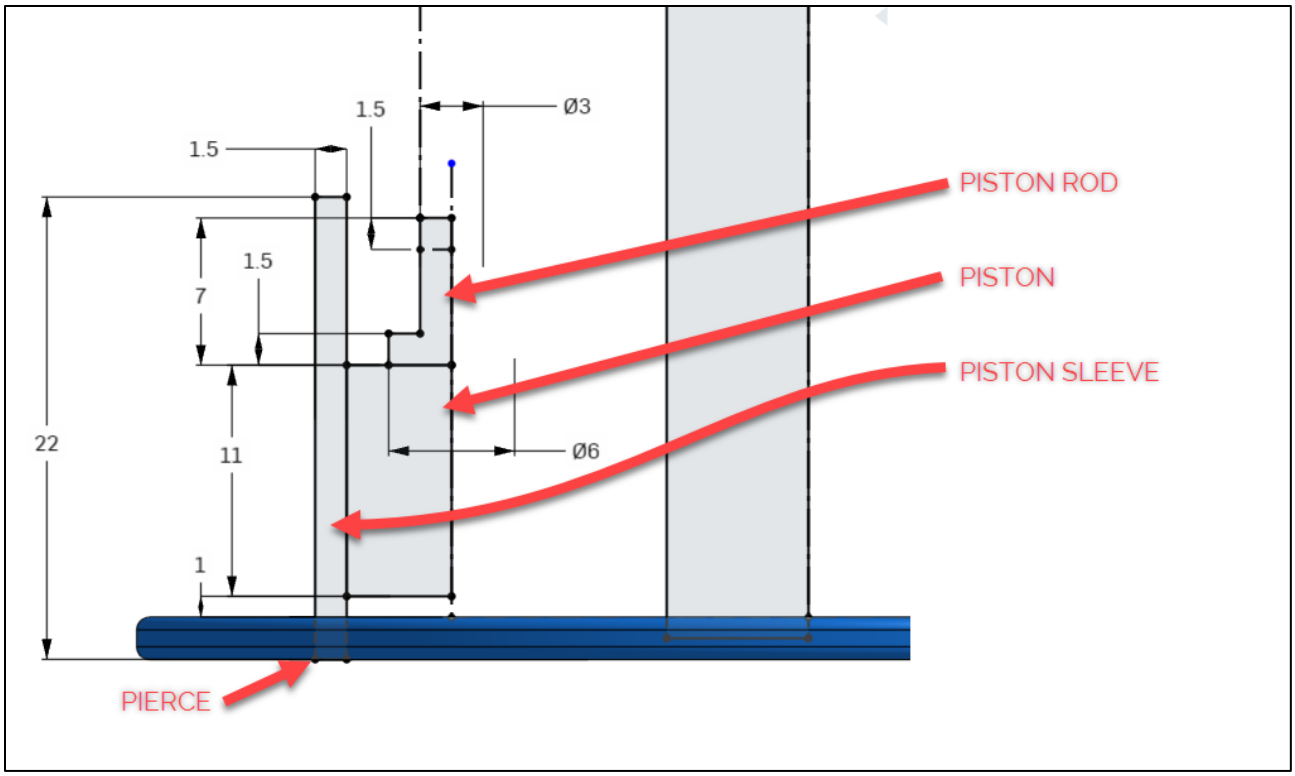

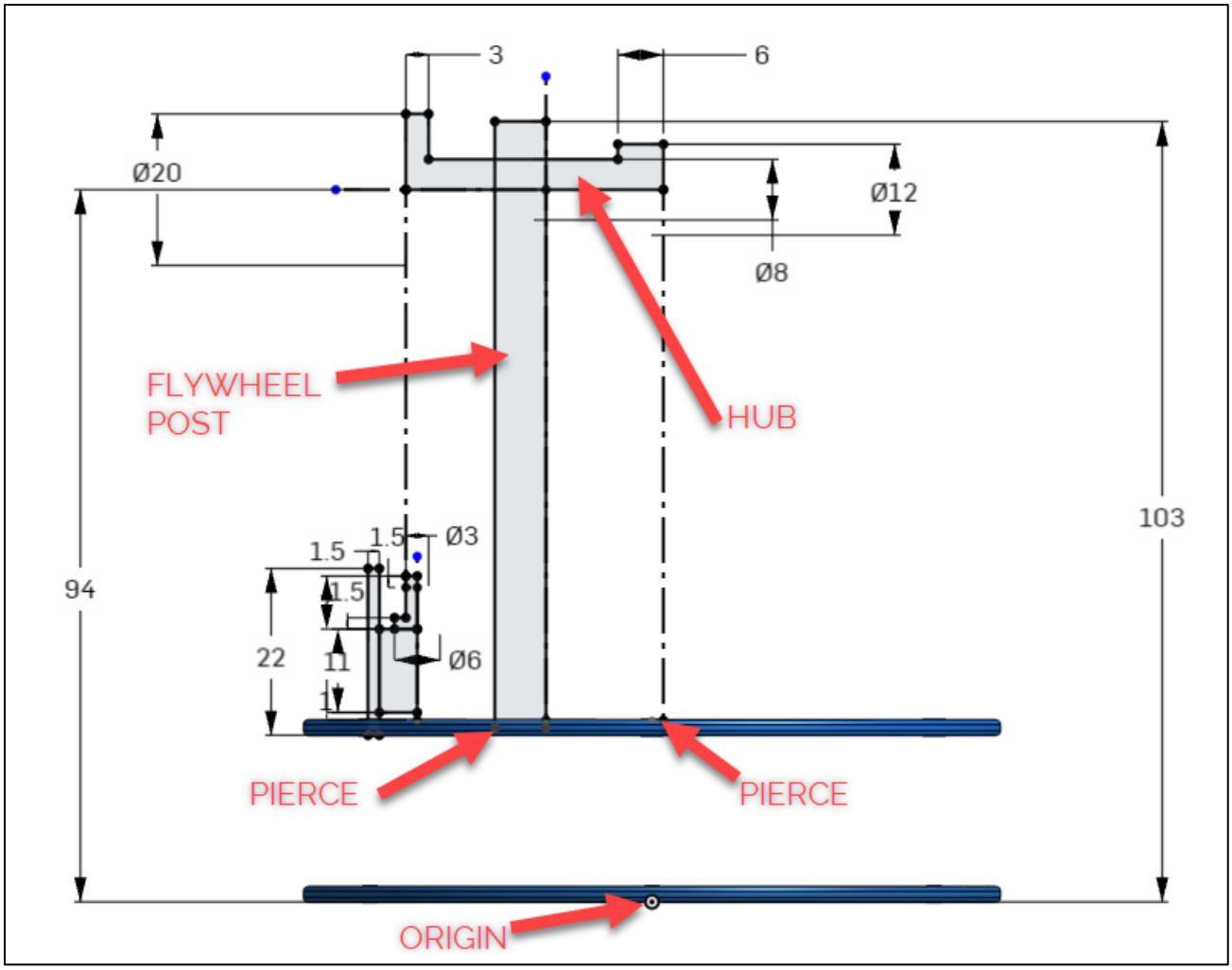

2. Exit this Sketch
   RENAME the sketch to **LAYOUT SKETCH**

3. Right Mouse Button on the sketch and choose **EDIT SKETCH APPEARANCE**
   Set the sketch to a **PURPLE** color

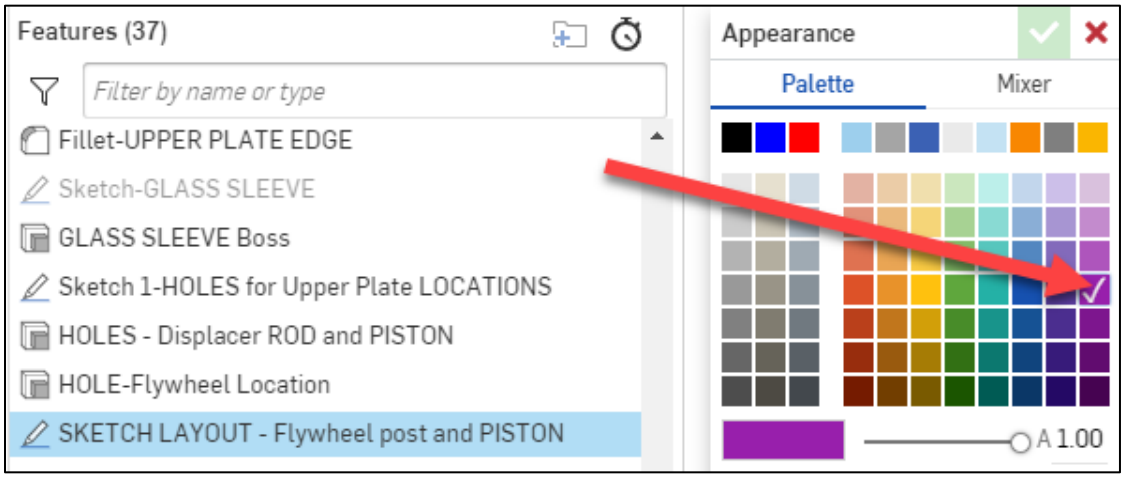

PISTON SLEEVE

1. Create a **REVOLVE** using the option **NEW**
   Select the rectangle region for the PISTON SLEEVE for the **Faces and sketch regions to revolve**
   Select the lower line as the **Revolve Axis**

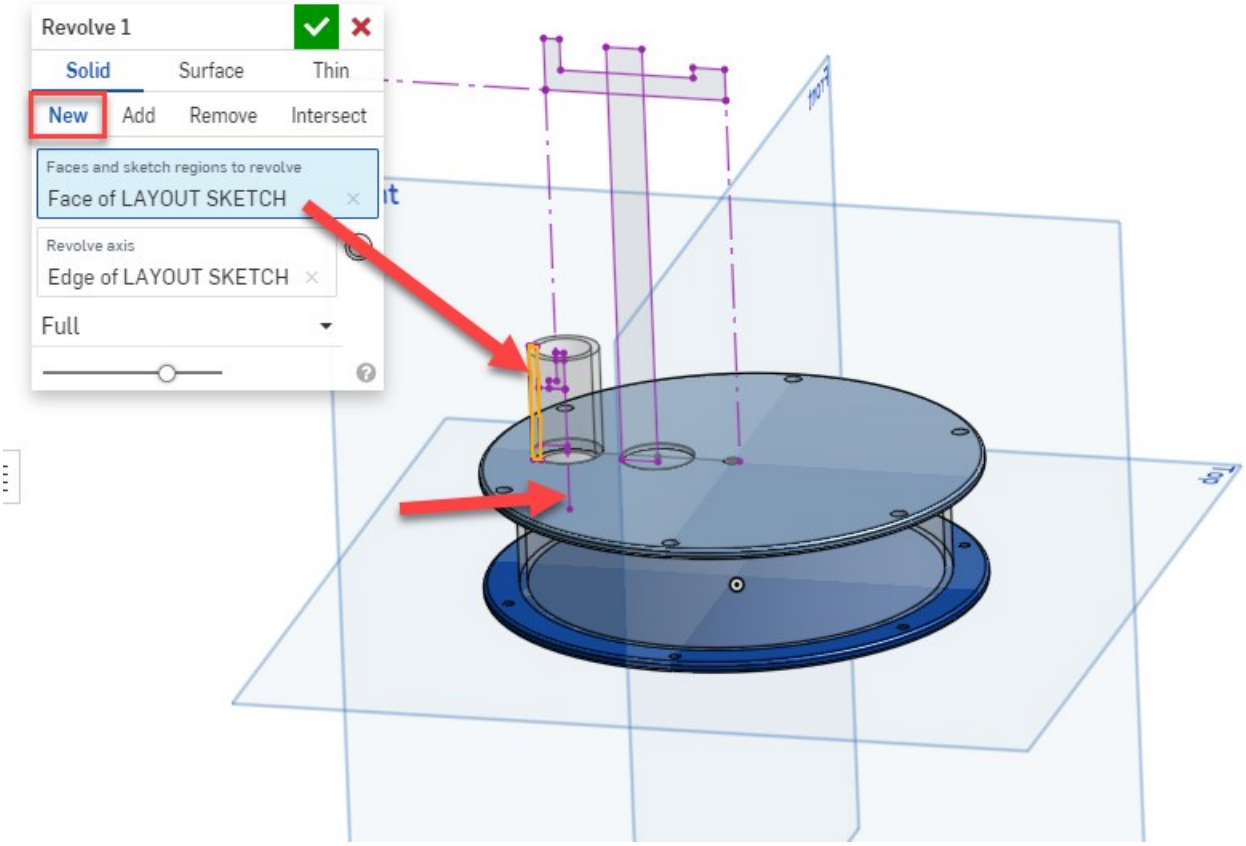

2. **RENAME** this part to PISTON SLEEVE

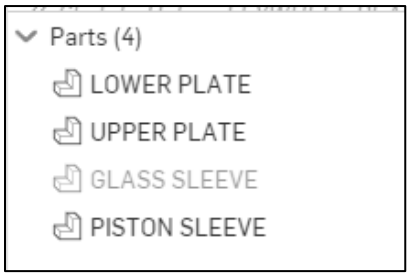

3. **SHOW** the LAYOUT SKETCH



PISTON

1. Create a **REVOLVE** using the option **NEW**
   Select the rectangle region for the PISTON for the **Faces and sketch regions to revolve**
   Select the lower line as the **Revolve Axis**

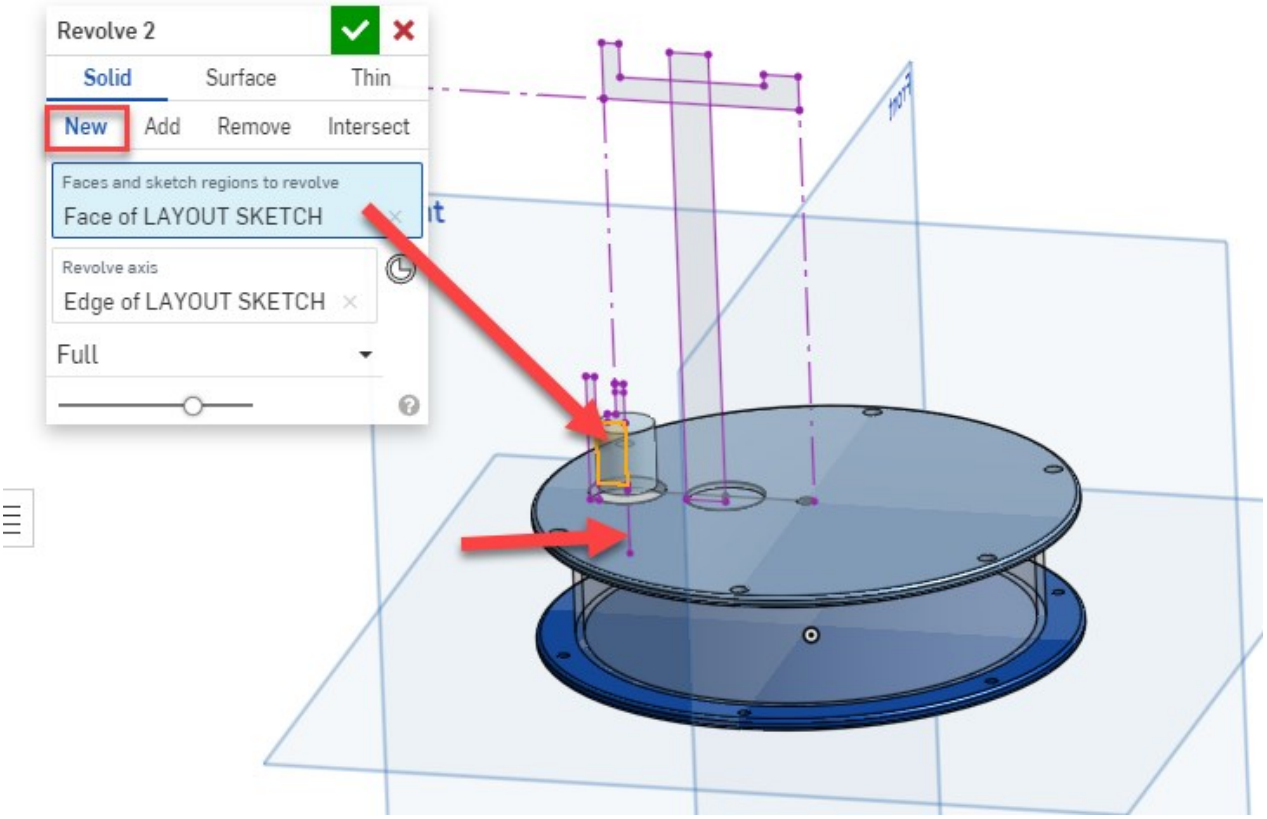

2. **RENAME** this part to PISTON

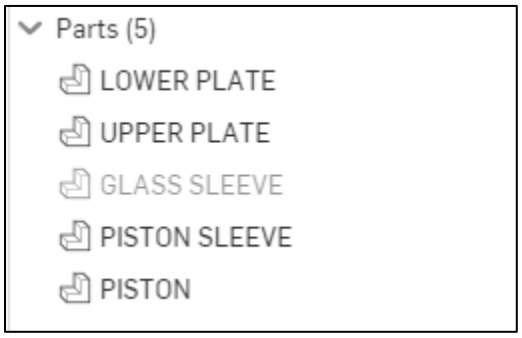

PISTON ROD

1. Create a **REVOLVE** using the option **NEW**
   Select the L SHAPED region for the PISTON ROD for the **Faces and sketch regions to revolve**
   Select the lower line as the **Revolve Axis**

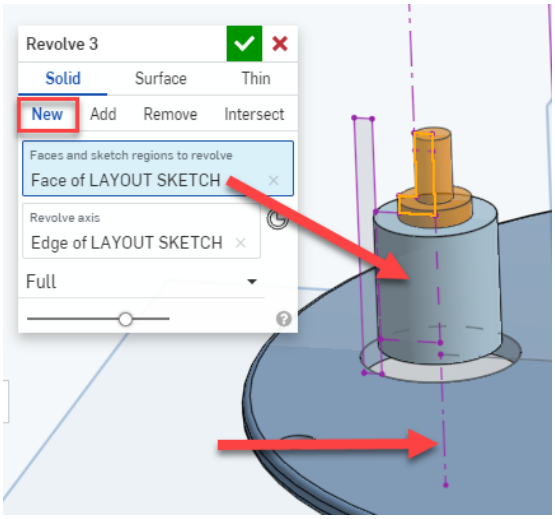

2. Rename this part to PISTON ROD

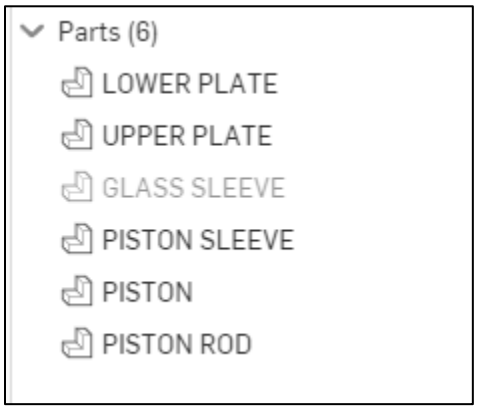

3. Create a **SKETCH** on the FRONT PLANE
   Sketch a circle with 2mm diameter and as shown.
   Use a coincident relationship to align this circle with the PISTON ROD

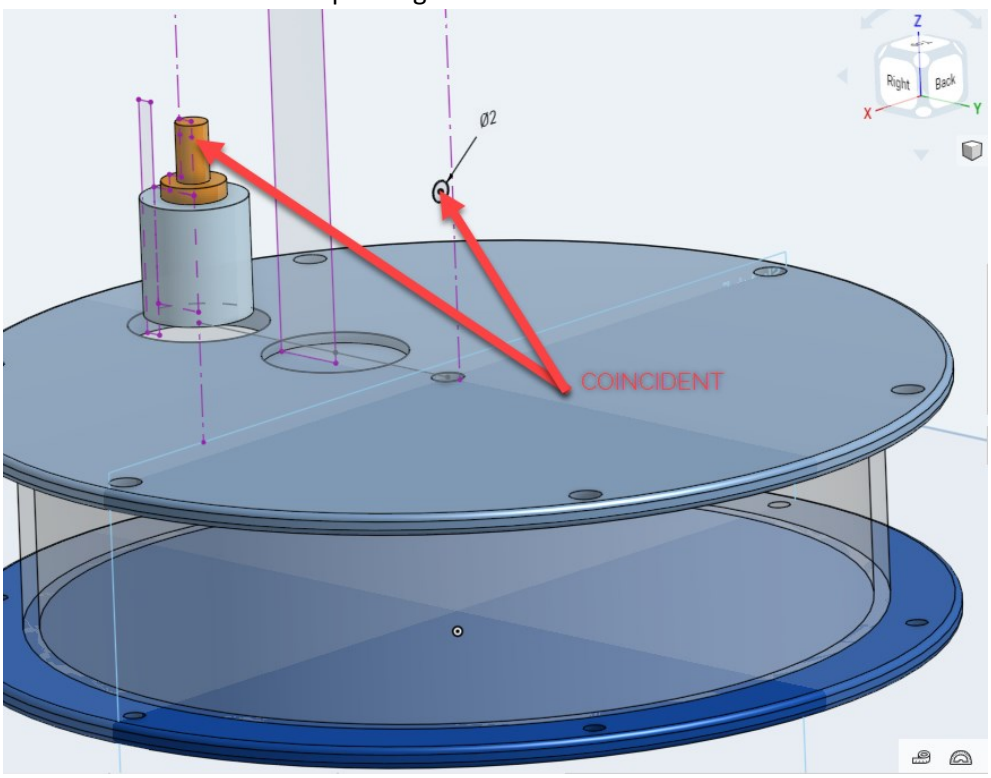

4. Create an **EXTRUDE** using the option **REMOVE**
   Set the END TYPE to **THROUGH ALL**
   Set the **MERGE SCOPE** to use PISTON ROD

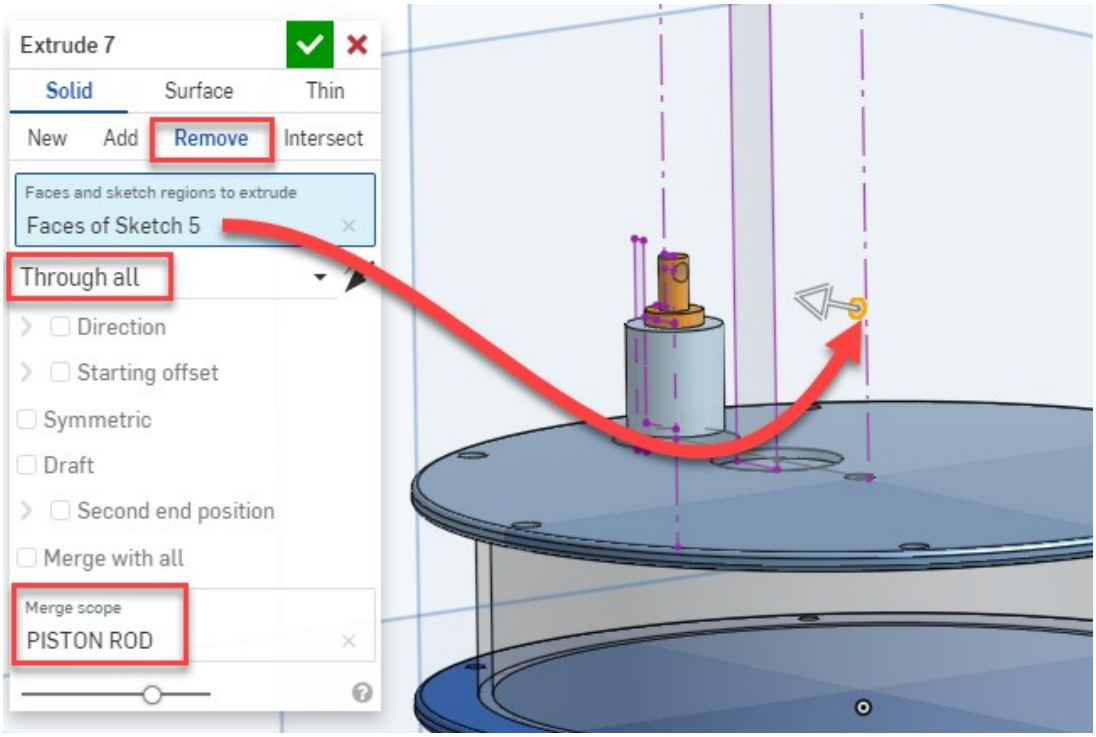

FLYWHEEL POST

1. Create a **REVOLVE** using the option **NEW**
   Select THREE REGIONS (as shown) for the FLYWHEEL POST for the **Faces and sketch regions to revolve**
   Select the lower line as the **Revolve Axis**

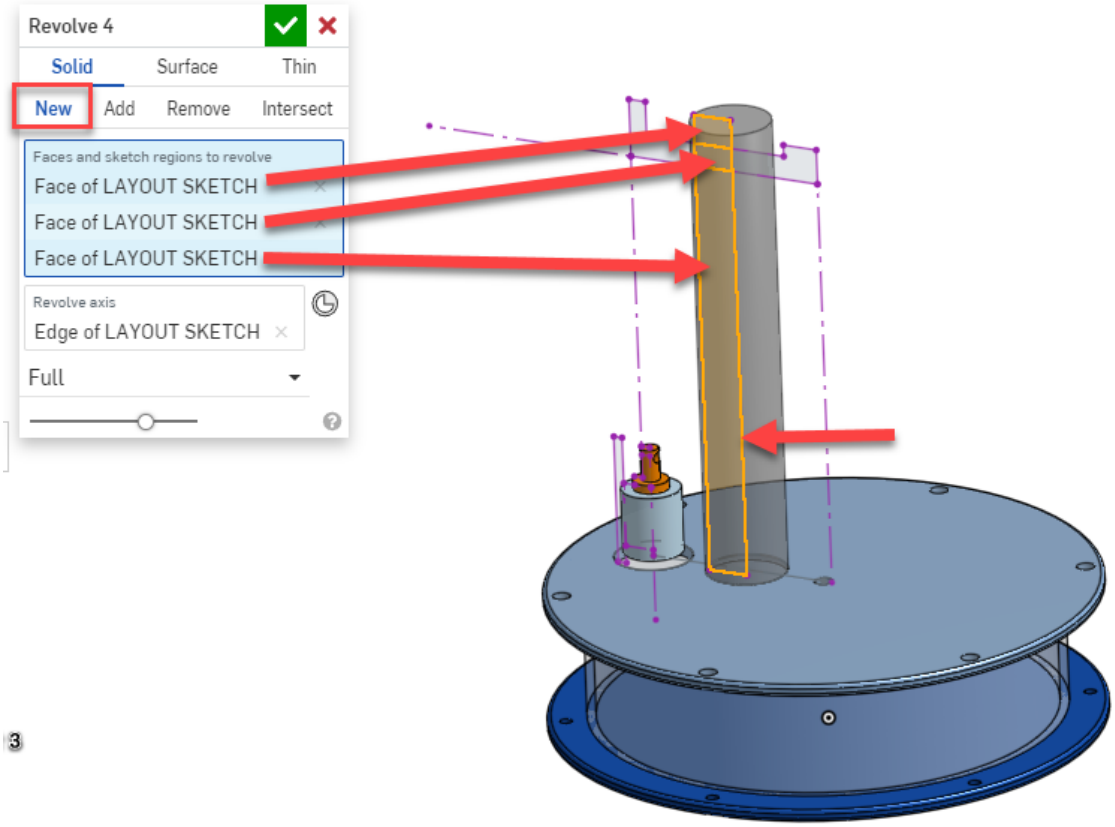

2. **RENAME** this part to FLYWHEEL POST

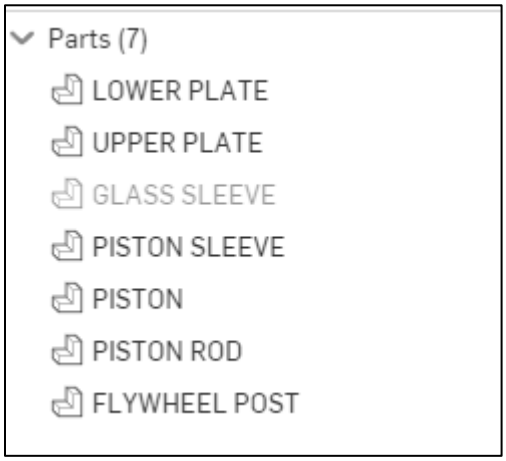

3. Create a **REVOLVE** using the option **REMOVE**
   Select the TWO REGIONS (as shown) for the **Faces and sketch regions to revolve**
   Select the HUB horizontal center line as the **Revolve Axis**

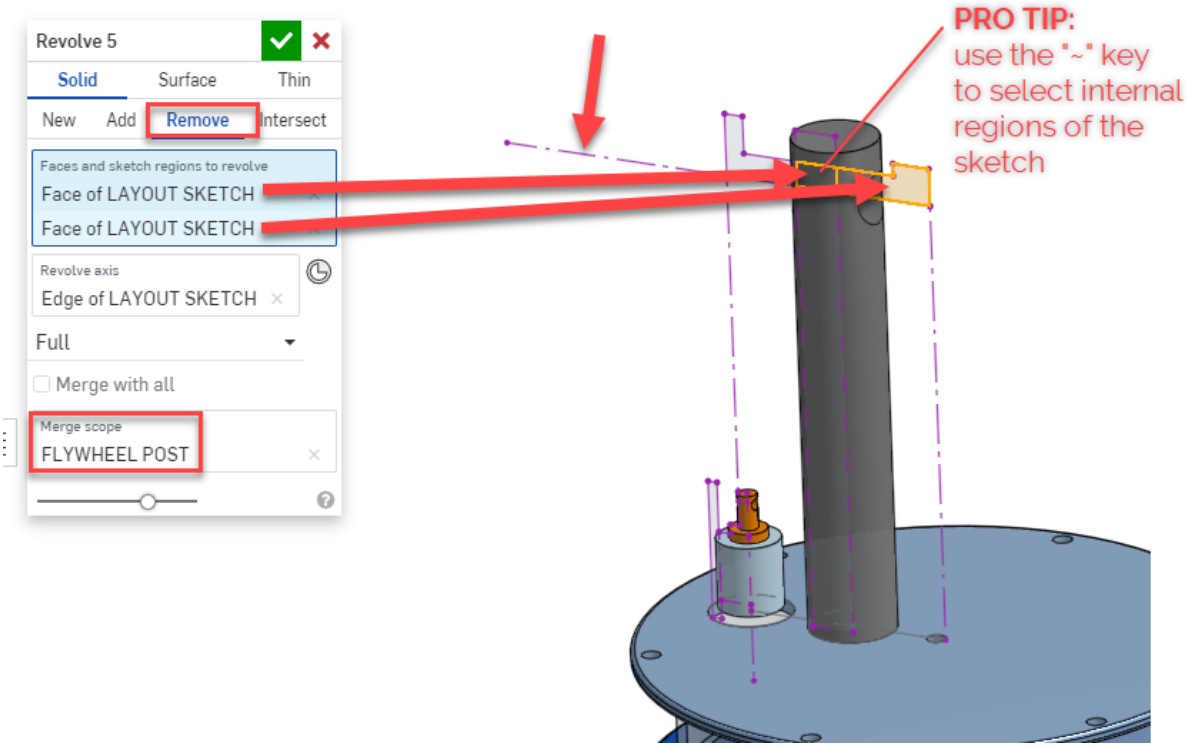

4. Create a **FILLET** using the option **EDGE**
   Select the top edge of the FLYWHEEL POST
   Set Radius value to **2.5mm**

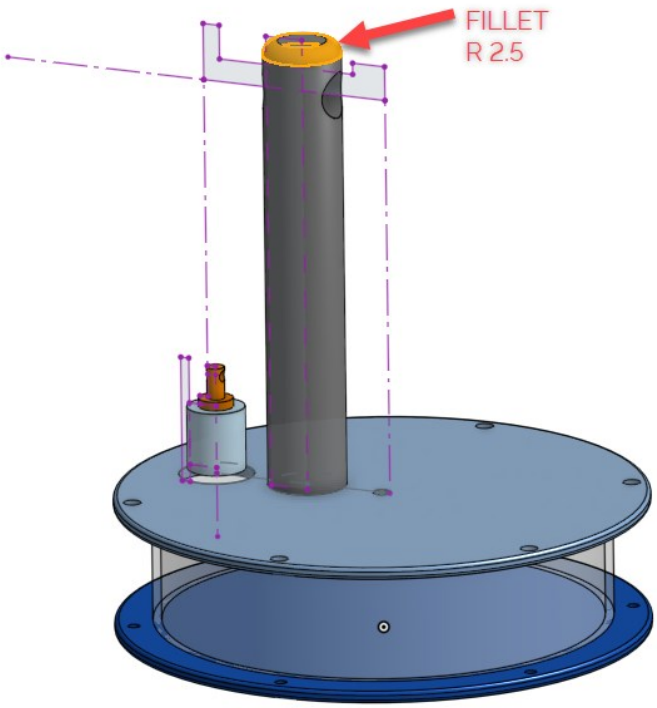

HUB

1. Create a **REVOLVE** using the option **NEW**
   Select THREE REGIONS (as shown) for the HUB for the **Faces and sketch regions to revolve**
   Select the HUB horizontal center line as the **Revolve Axis**

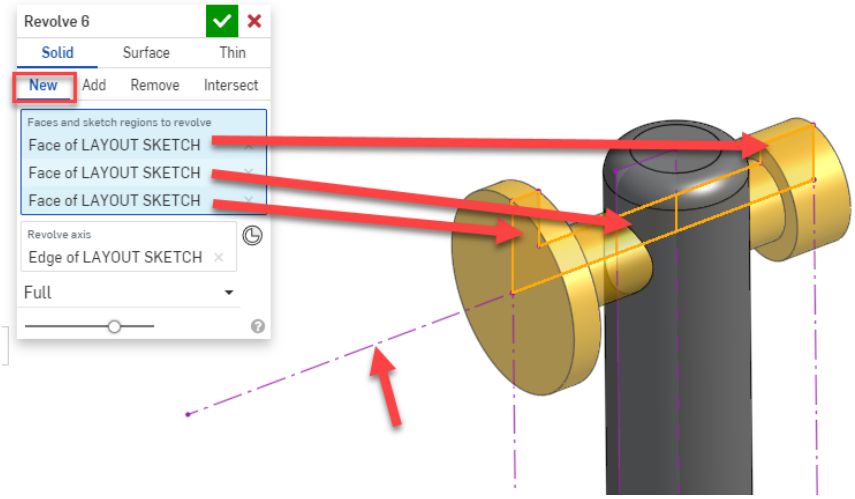

2. Rename this part HUB

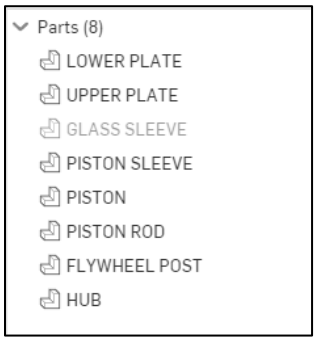

3. Create a **CHAMFER** using the option **EQUAL DISTANCE**
   Select the top and bottom edges of the disc
   Select the distance to **2 mm**

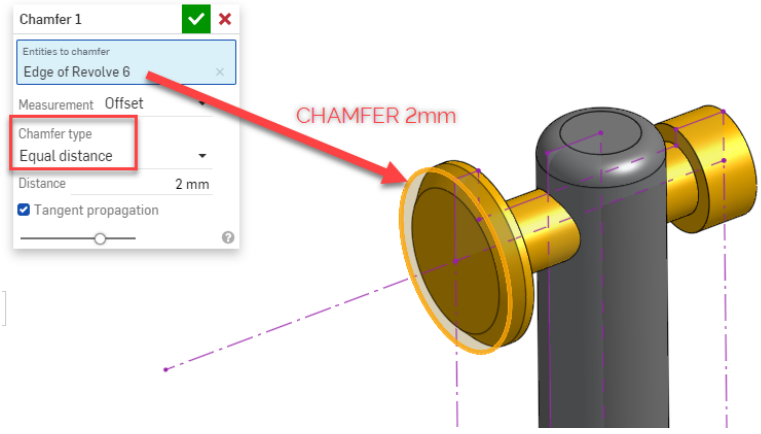

4. Create a **SKETCH** on the front face of the HUB
   Sketch a circle with 2mm diameter located as shown

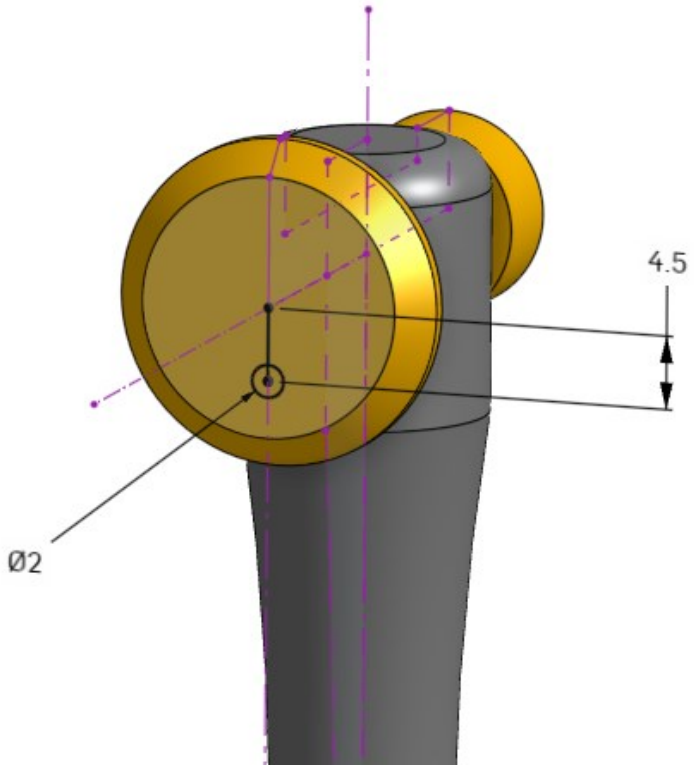

5. Create an **EXTRUDE** using the option **REMOVE**
   Set the END TYPE to **BLIND** with a depth of 2mm
   In the MERGE SCOPE choose HUB

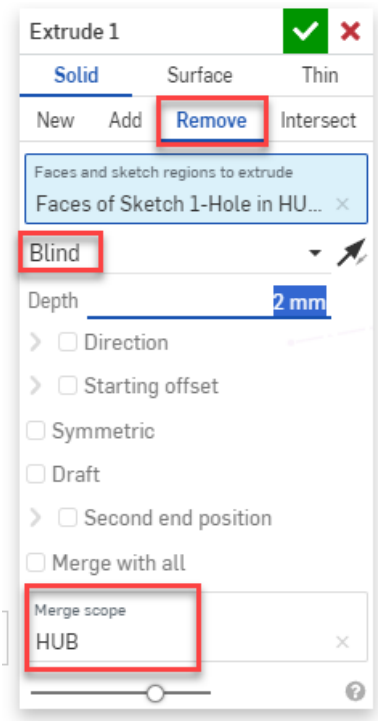

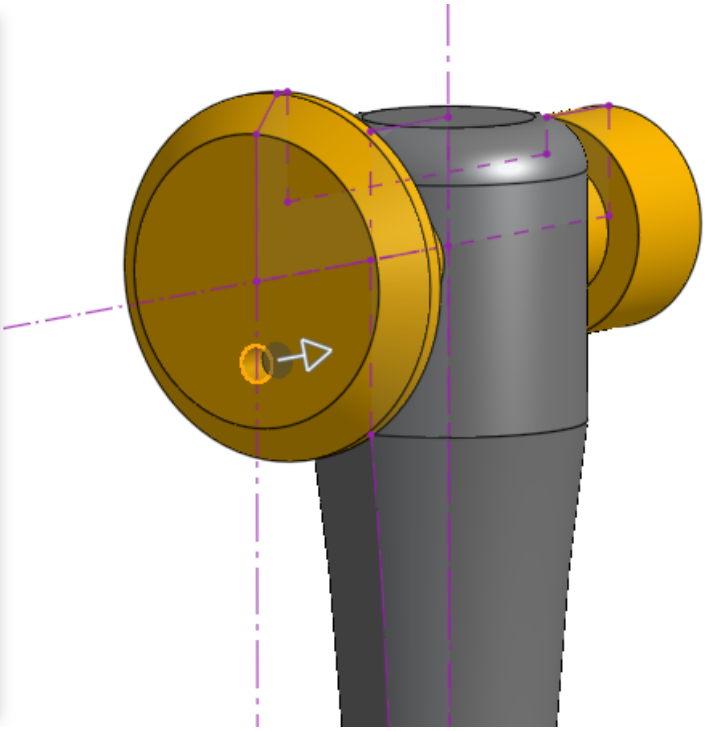

6. Create a **SKETCH** on the rear face of the HUB
   Sketch a circle with 2mm diameter located as shown

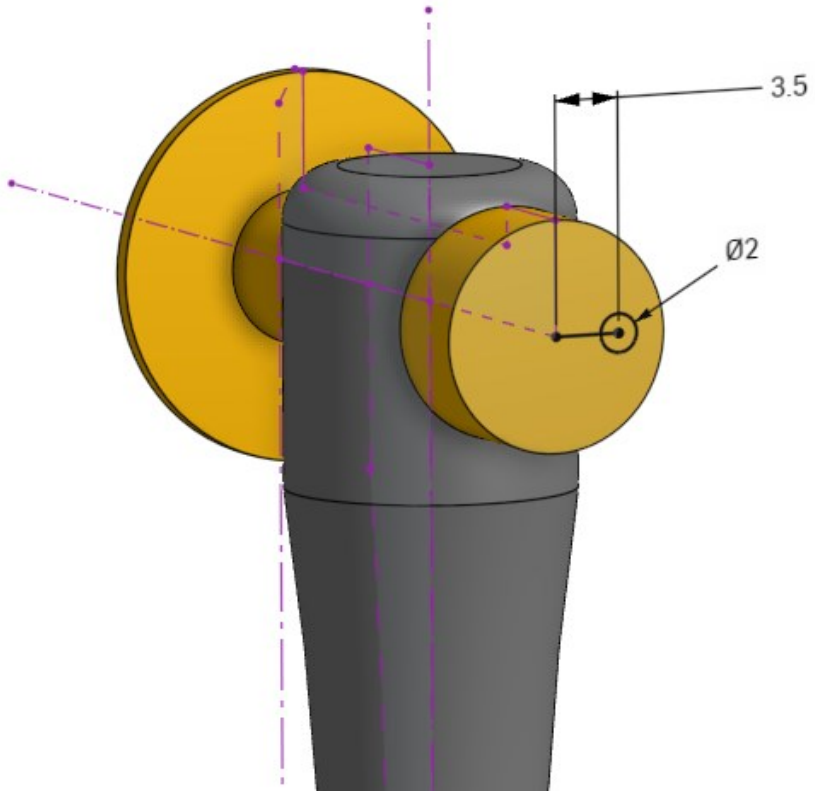

7. Create an **EXTRUDE** using the option **REMOVE**
   Set the END TYPE to **BLIND** with a depth of 2mm
   In the MERGE SCOPE choose HUB

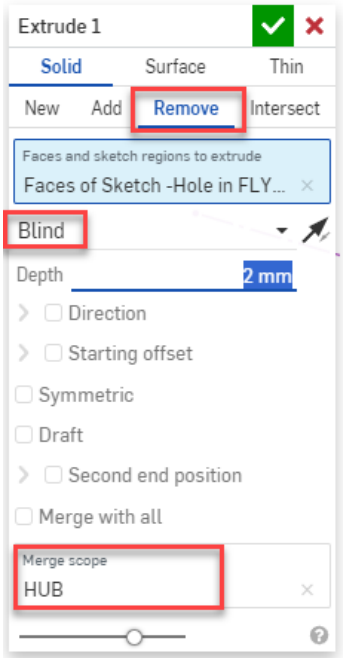

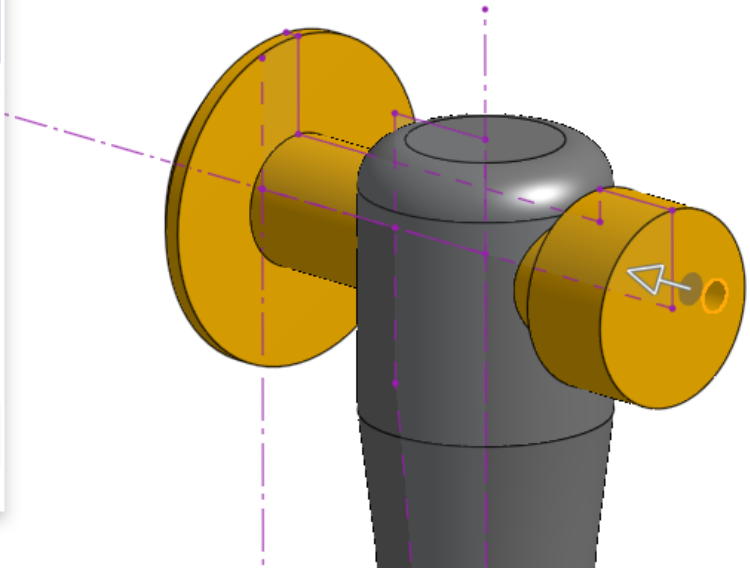

CONNECTING ROD - REAR

1. Create a **NEW Part Studio**
   Use the PLUS (+) sign in the lower left to create a NEW PART STUDIO

2. **RENAME** this part studio to C ROD-REAR



3. Create a **SKETCH** on the RIGHT PLANE using the following geometry

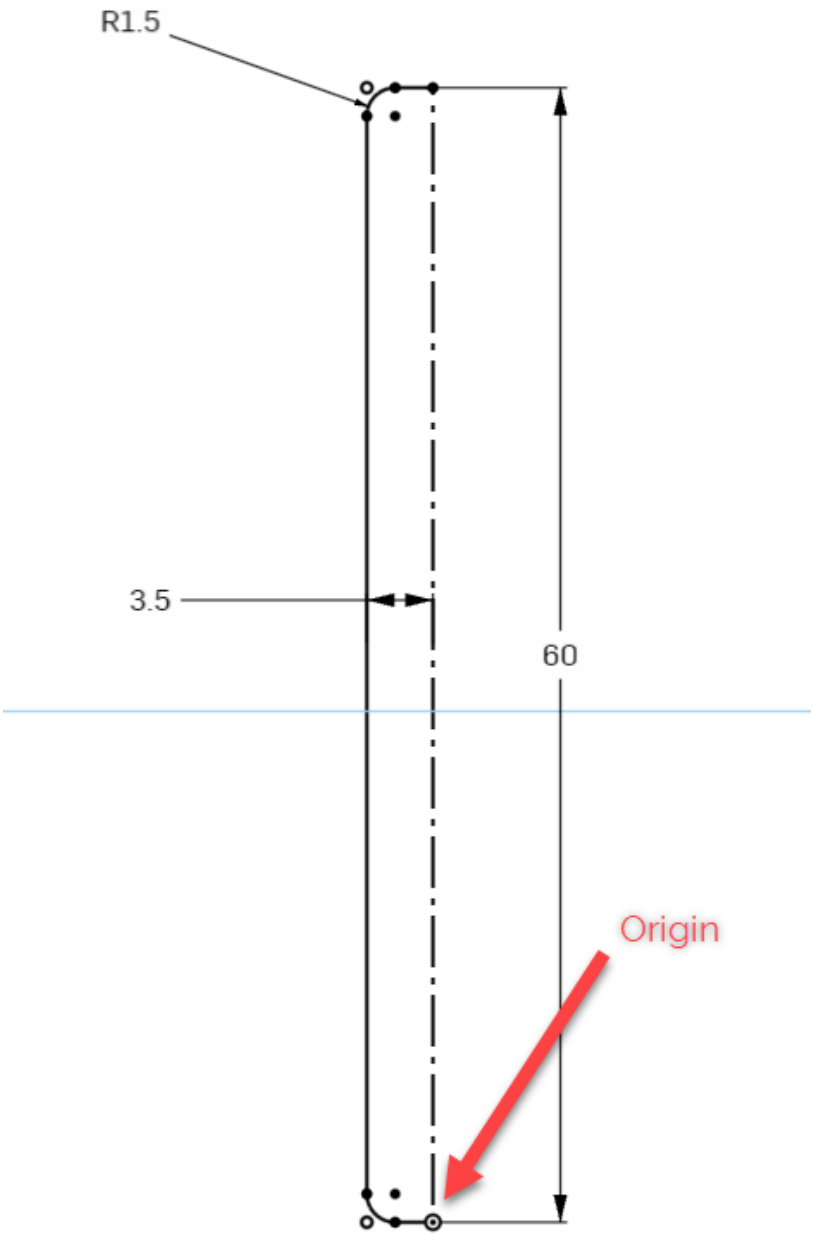

4. Create a **SKETCH** on the FRONT PLANE

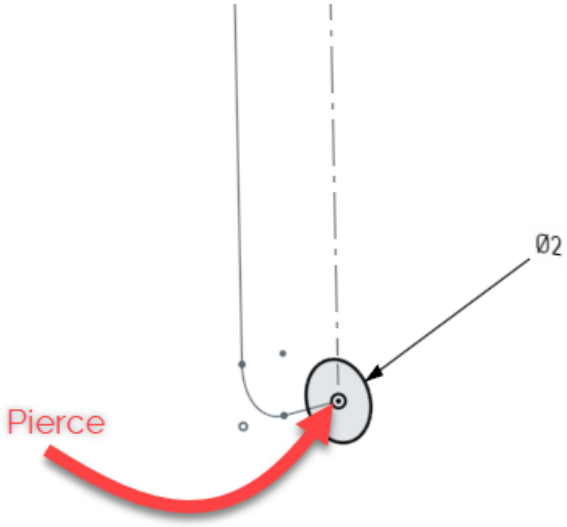

5. Create a **SWEEP** using the option for **NEW**

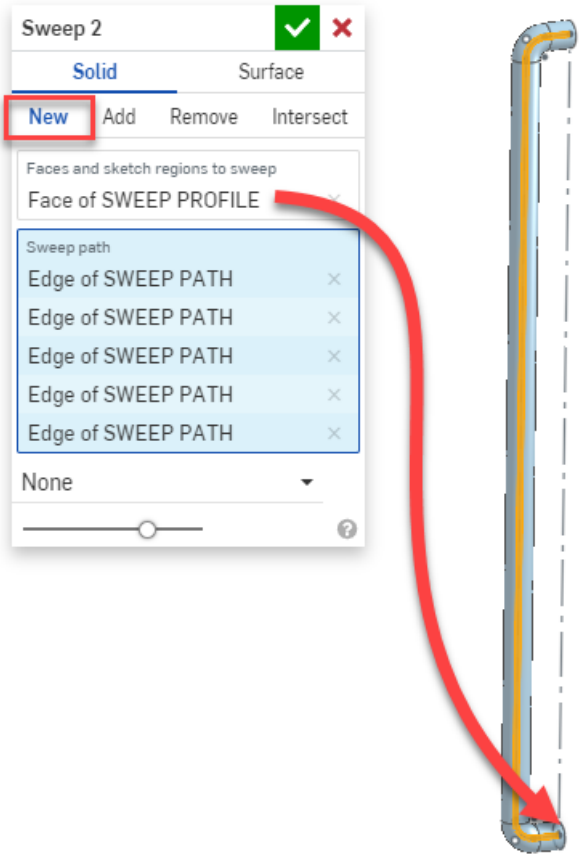

6. **RENAME** this part CONNECTING ROD-REAR



CONNECTING ROD - FRONT

1. Return to the **MAIN MECHANISM** tab



2. Create a **SKETCH** on the RIGHT PLANE as shown

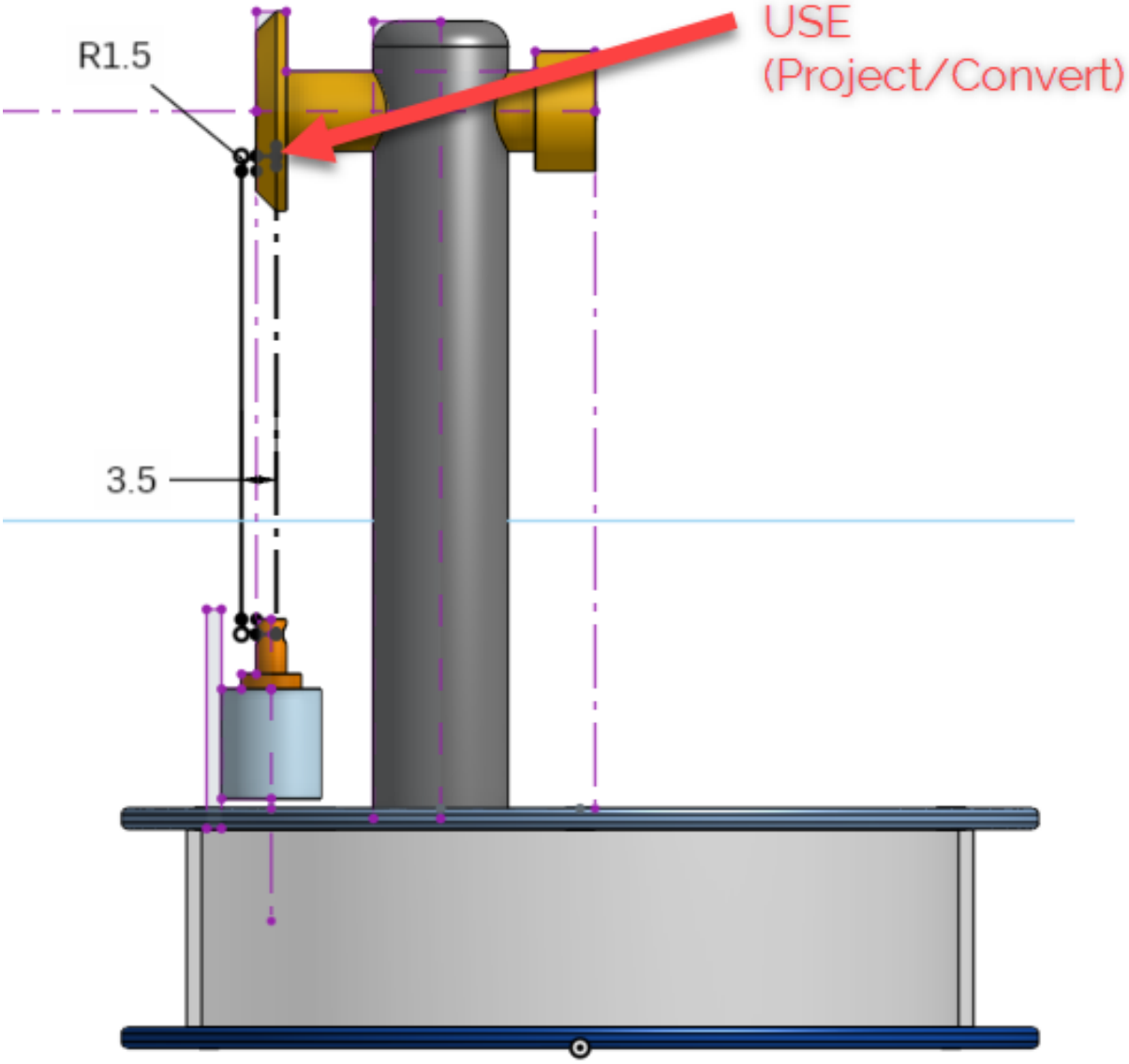

3. Create a **SWEEP** using the option for **NEW**
   Select this FACE for the “Faces and sketch regions to sweep”
   Select the SWEEP PATH geometry

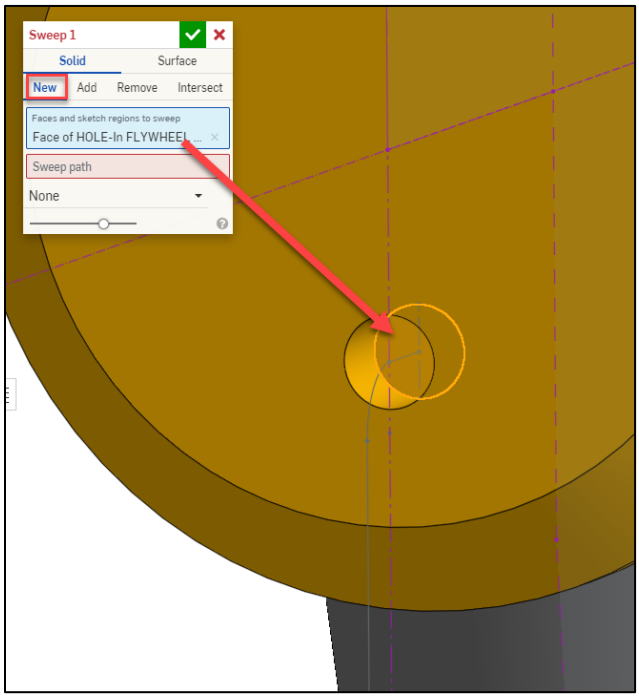

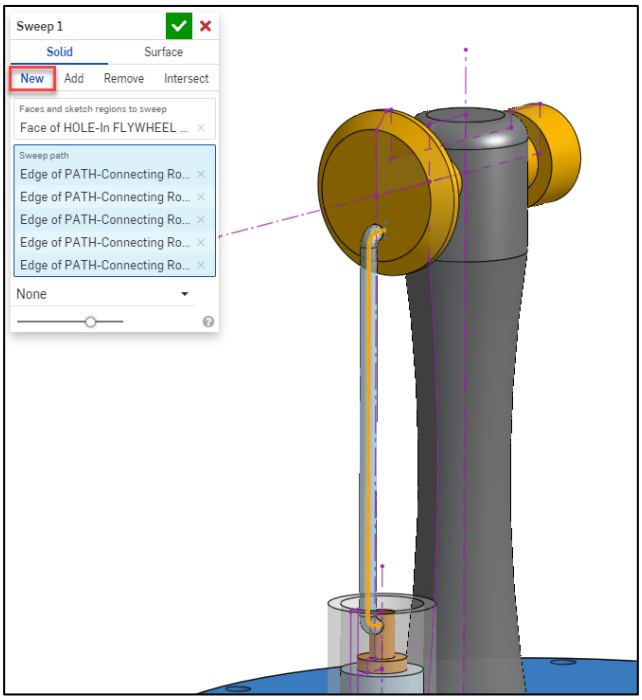

4. Rename this part: CONNECTING ROD-FRONT

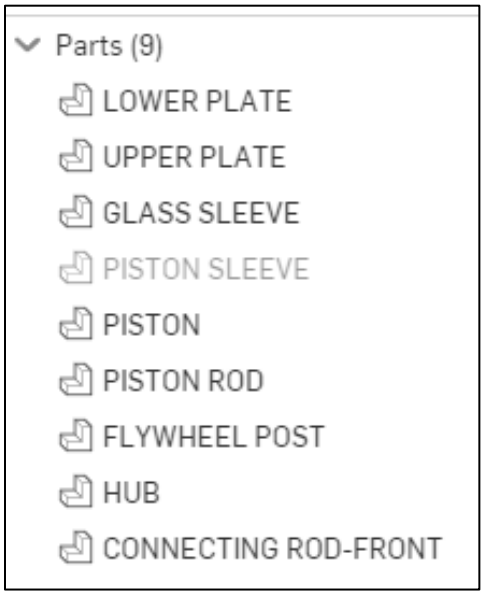

FLYWHEEL

1. Create a **NEW Part Studio**
   Use the PLUS (+) sign in the lower left to create a NEW PART STUDIO

2. **RENAME** this part studio to FLYWHEEL



3. Create a **SKETCH** on the RIGHT PLANE as shown

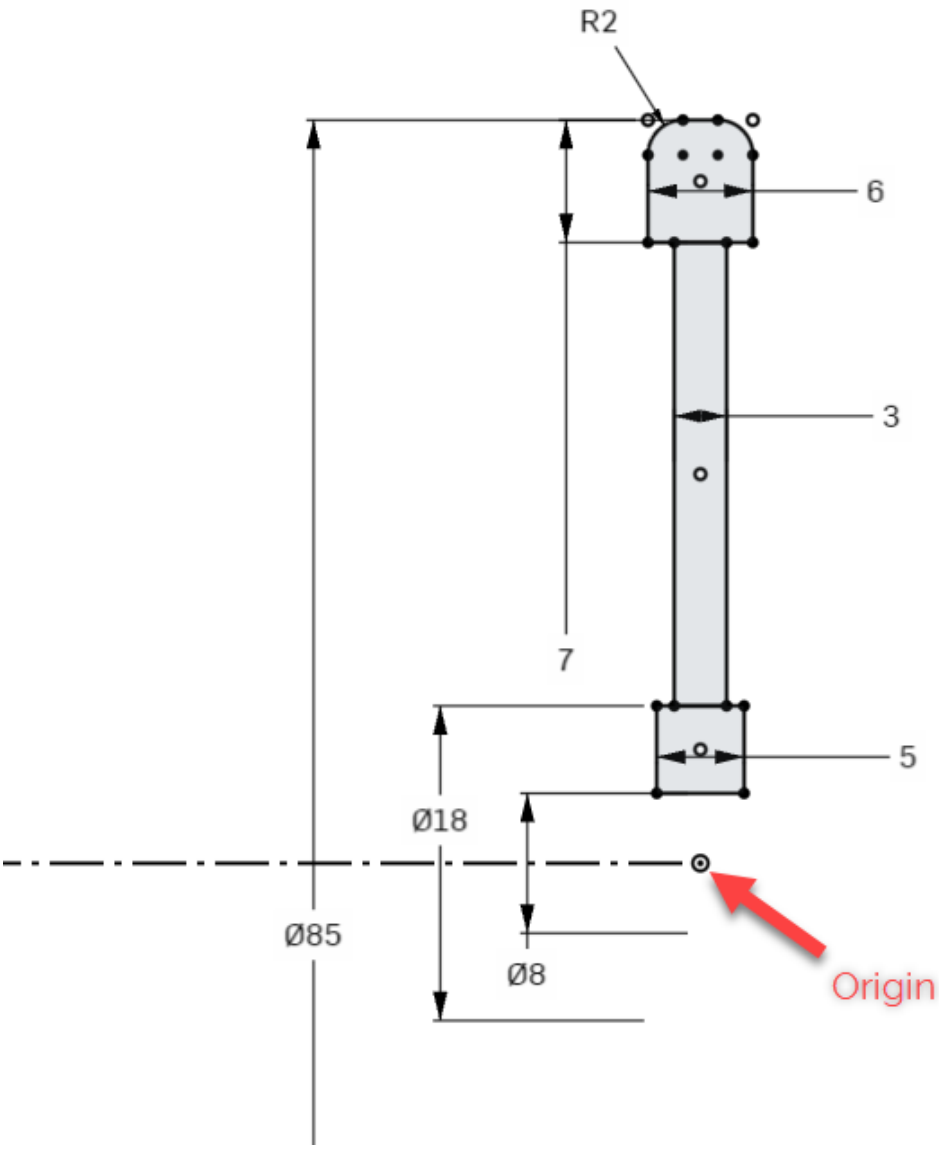

4. Create a **REVOLVE** using the option **NEW**
   The sketch will automatically be selected for the **Faces and sketch regions to revolve**
   Select the horizontal center line as the **Revolve Axis**

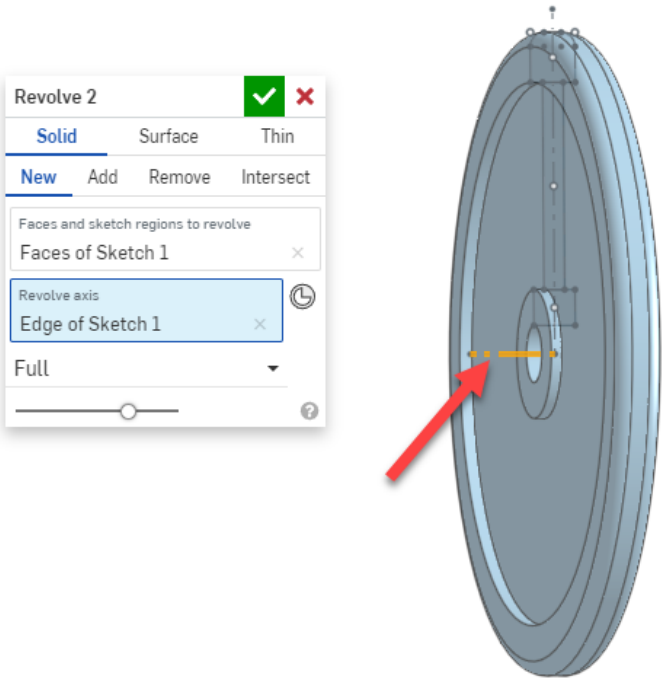

5. Create a **SKETCH** on the front surface of the flywheel as shown

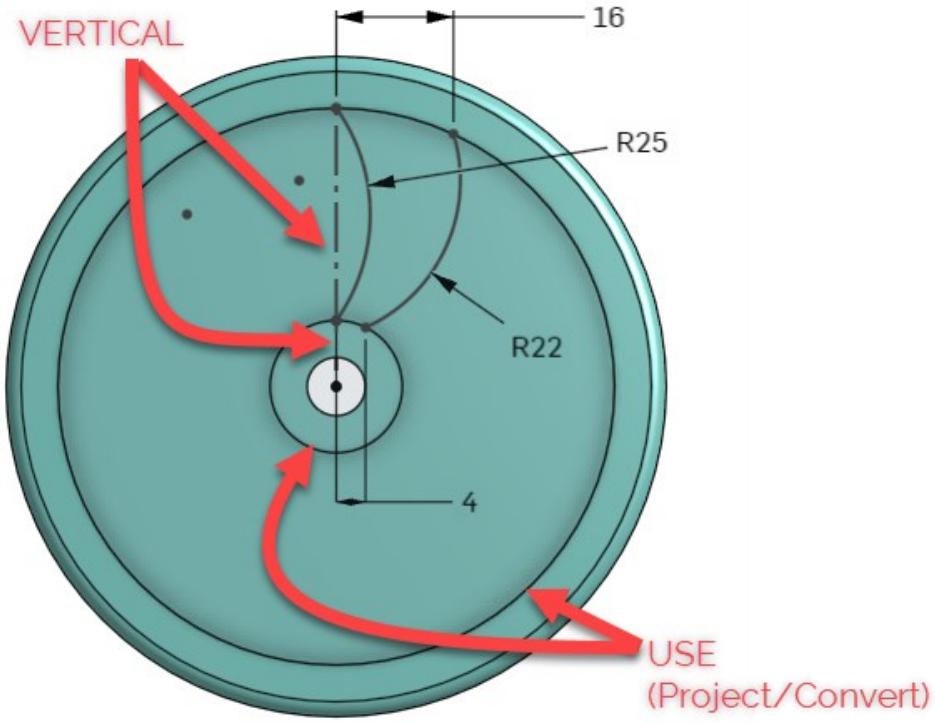

6. Create an **EXTRUDE** using the option **REMOVE**
   Use the SPACEBAR to clear the current selections, then select the inner region of the sketch (shown)
   Set the END TYPE to **THROUGH ALL**

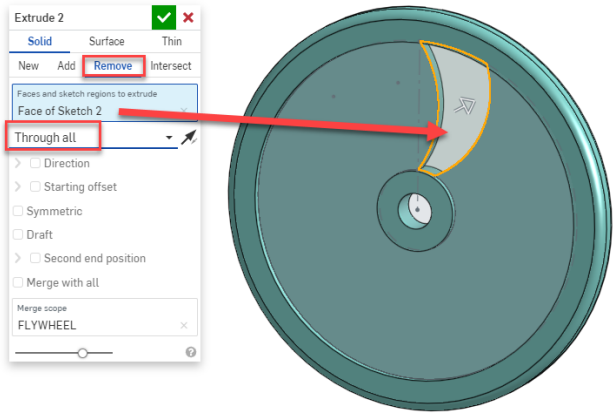

7. Create a **CIRCULAR PATTERN** using the option **Feature Pattern**
   Select the Extrude1 we created in the previous step as the **Features to Pattern**
   Select the inner circular edge as the **Axis of Pattern**
   Set the **Instance Count** to **6**
   Check the option on for **REAPPLY FEATURES**

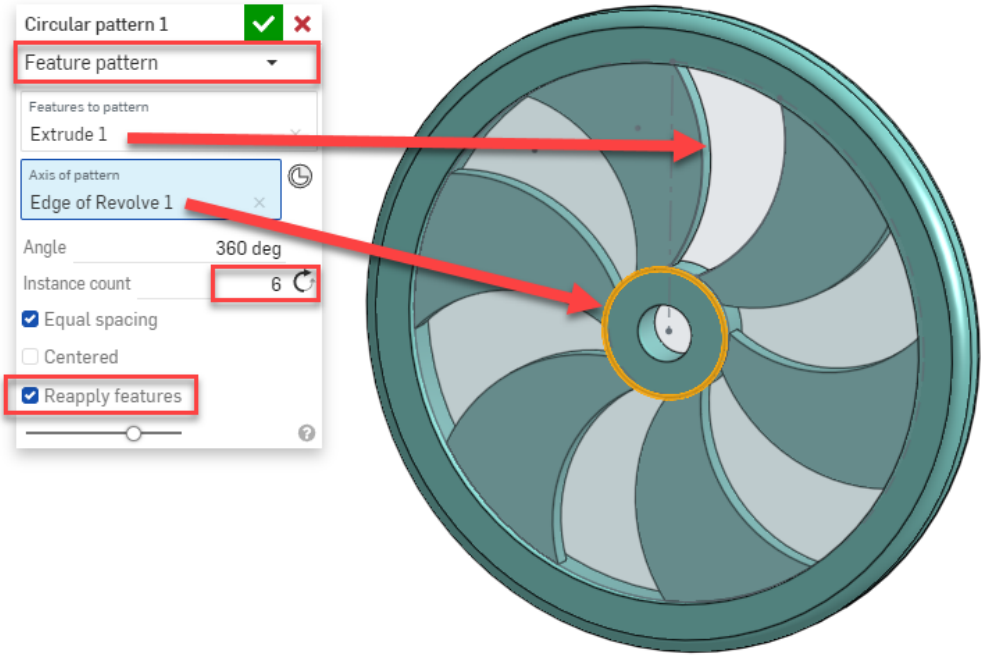

8. **RENAME** this part FLYWHEEL

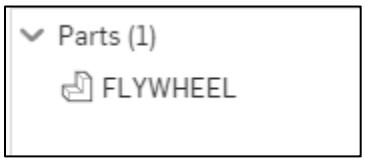

MAIN ASSEMBLY, INSERT PARTS, FIX

1. Go to the tab called Assembly1
   RENAME this tab to MAIN ASSM



2. Launch the **INSERT** command

   Select the Part Studio named **MAIN MECHANISM** and then hit the green checkmark

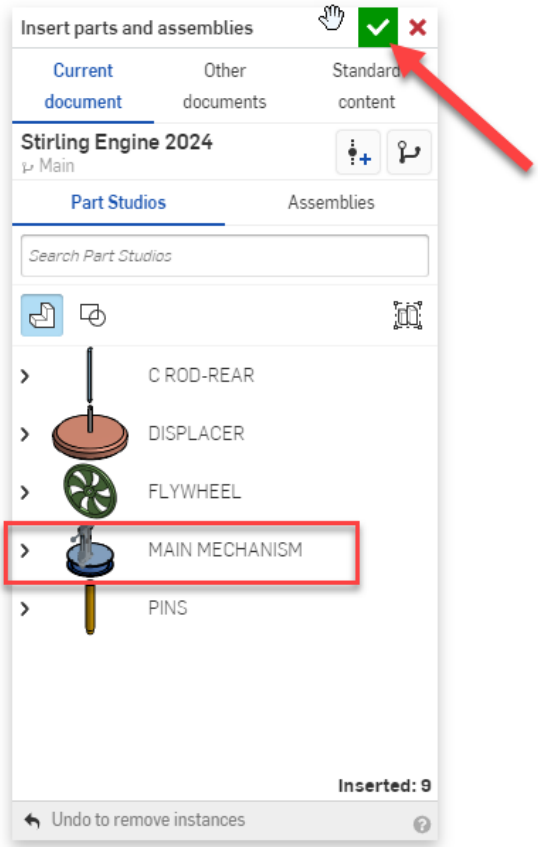

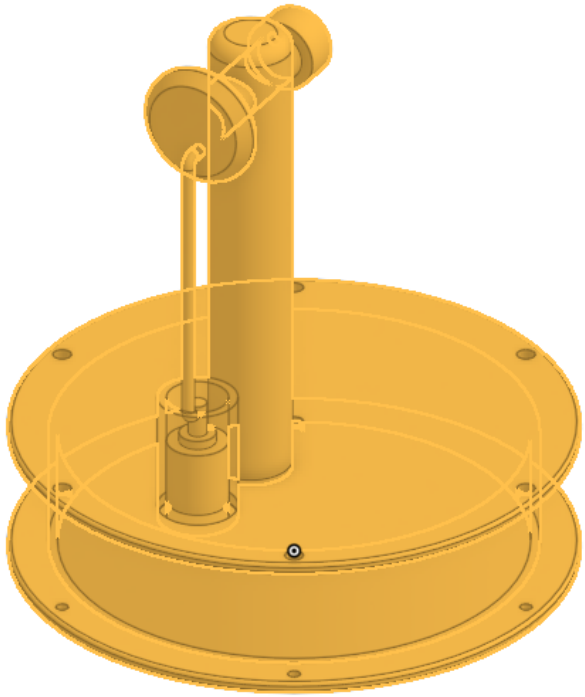

3. Launch the **INSERT** command again
   Select the Part Studio named **PINS** and then **LEFT CLICK** in the graphics area
   Leave the INSERT command open

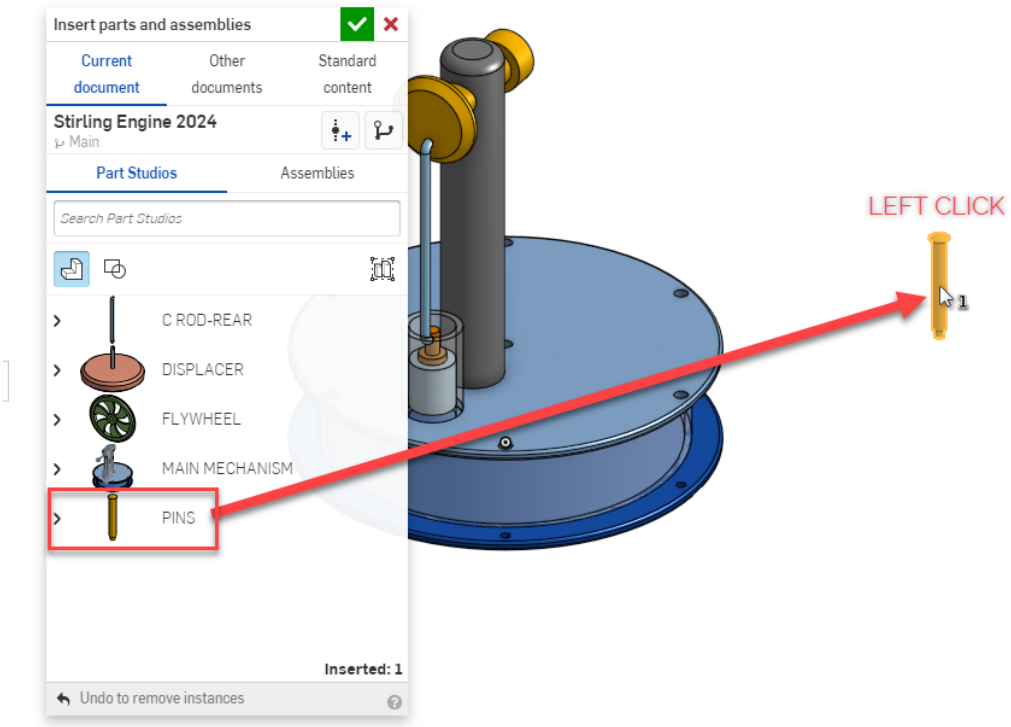

4. While still in the **INSERT** command
   Select the Part Studio named **DISPLACER** and then LEFT CLICK in the graphics area
   Click the GREEN CHECKMARK to finish and close the INSERT command

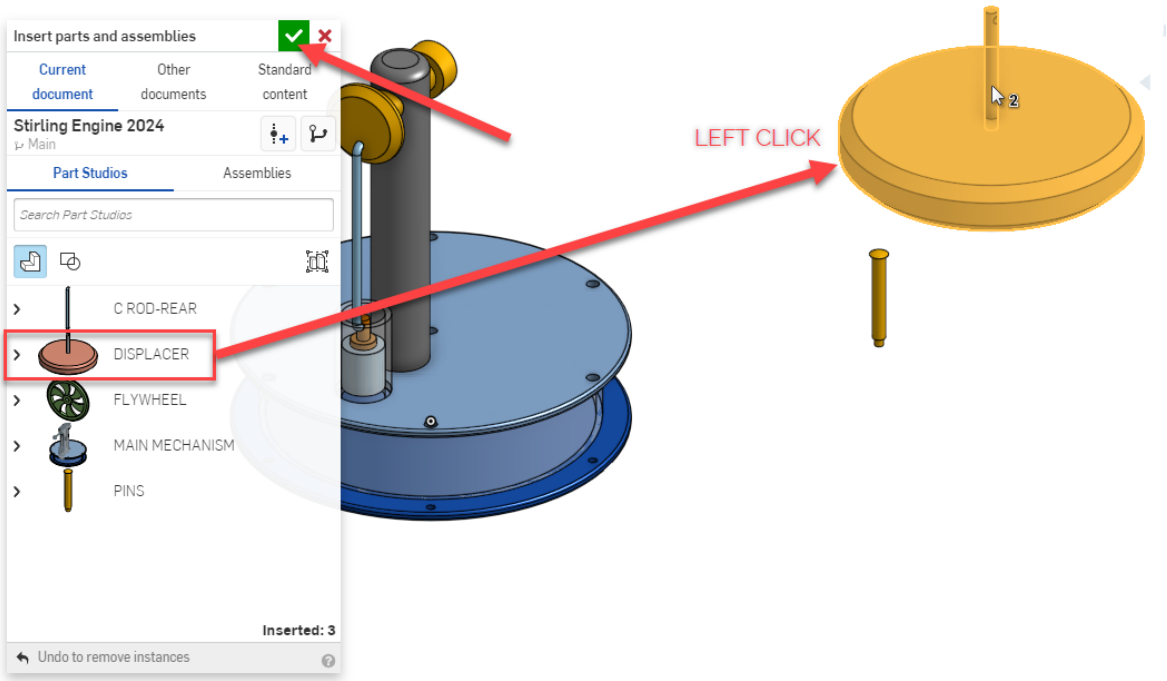

5. **REORDER** the parts in the tree by DRAGGING them up and down

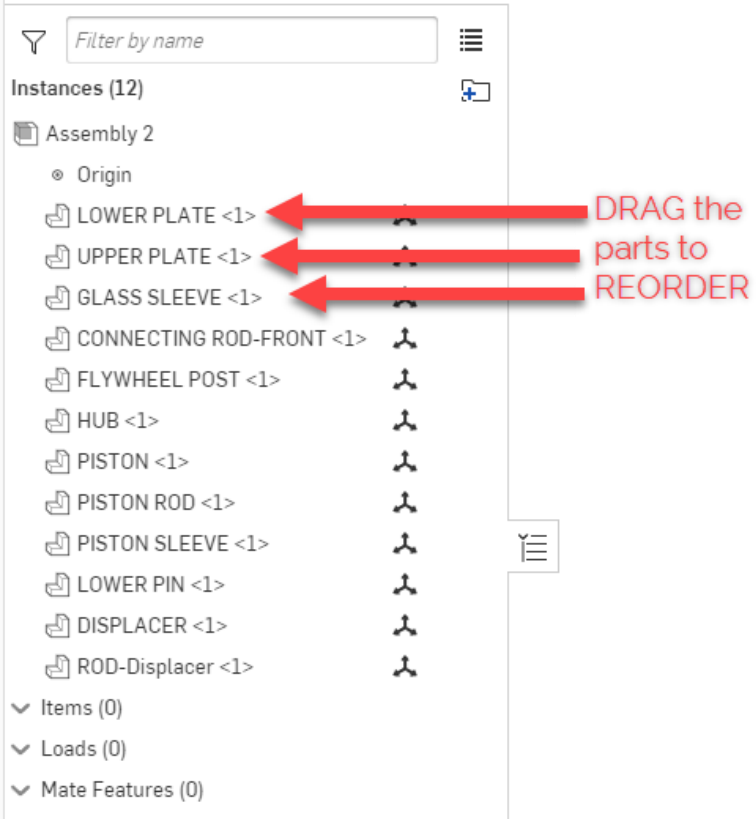

6. RIGHT MOUSE BUTTON on the LOWER PLATE in the tree and choose **FIX**

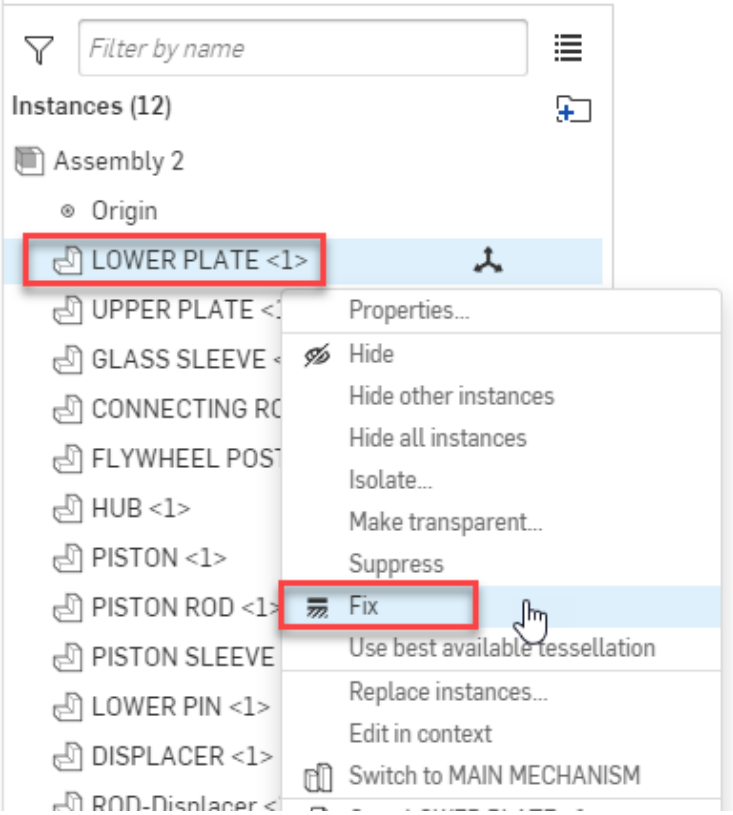

GROUP

1. Launch the command **GROUP** 
   Select the DISPLACER and the DISPLACER ROD from the graphics area
   Hit the green checkmark  to create the group

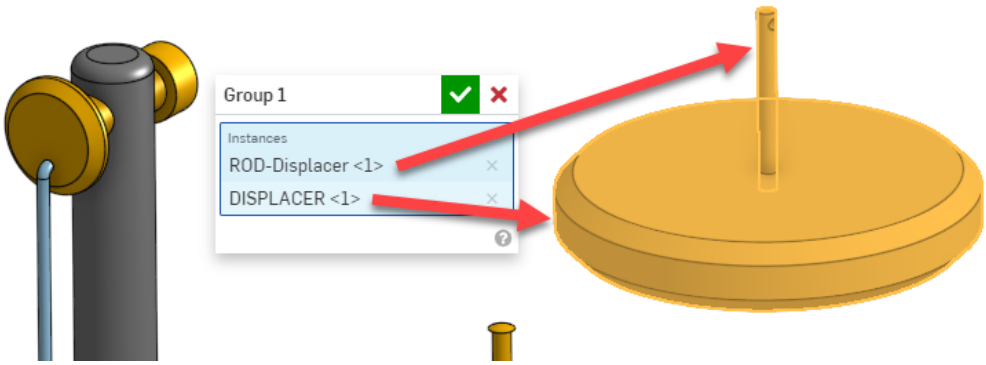

2. **SELECT** the following components from the tree:
   - LOWER PLATE
   - UPPER PLATE
   - GLASS SLEEVE
   - FLYWHEEL POST
   - PISTON SLEEVE

   Launch the command **GROUP** 
   Hit the green checkmark  to create the group

3. 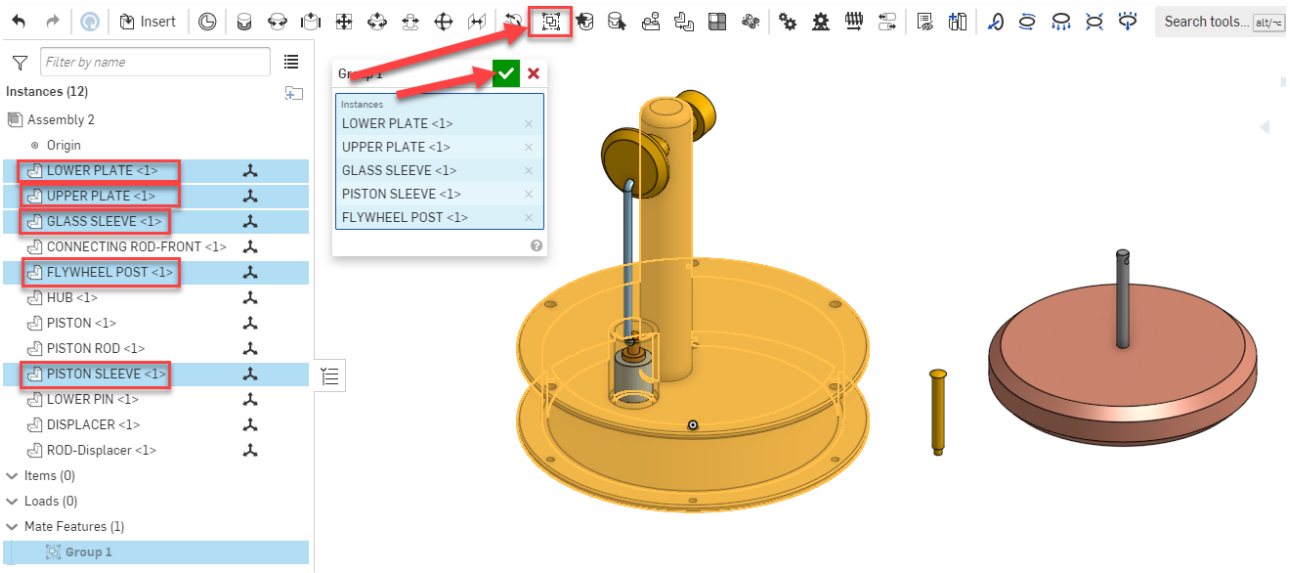

4. **SELECT** the following components from the tree:
   - PISTON
   - PISTON ROD

   Launch the command **GROUP** 

   Hit the green checkmark  to create the group

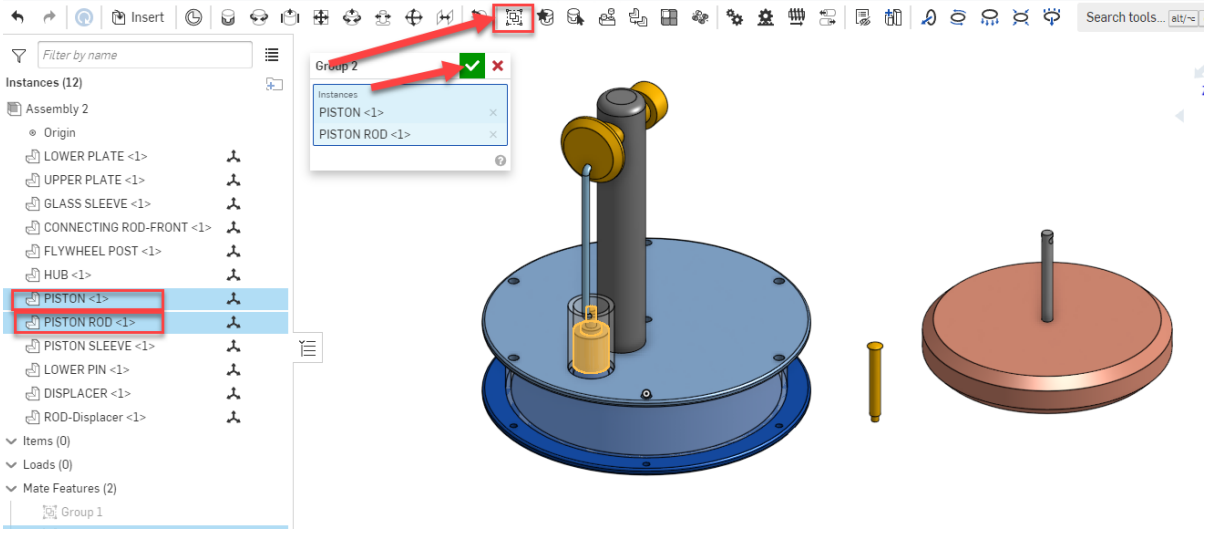

5. DRAG the HUB, CONNECTING ROD and PISTON/PISTON ROD (group) away from the remaining components

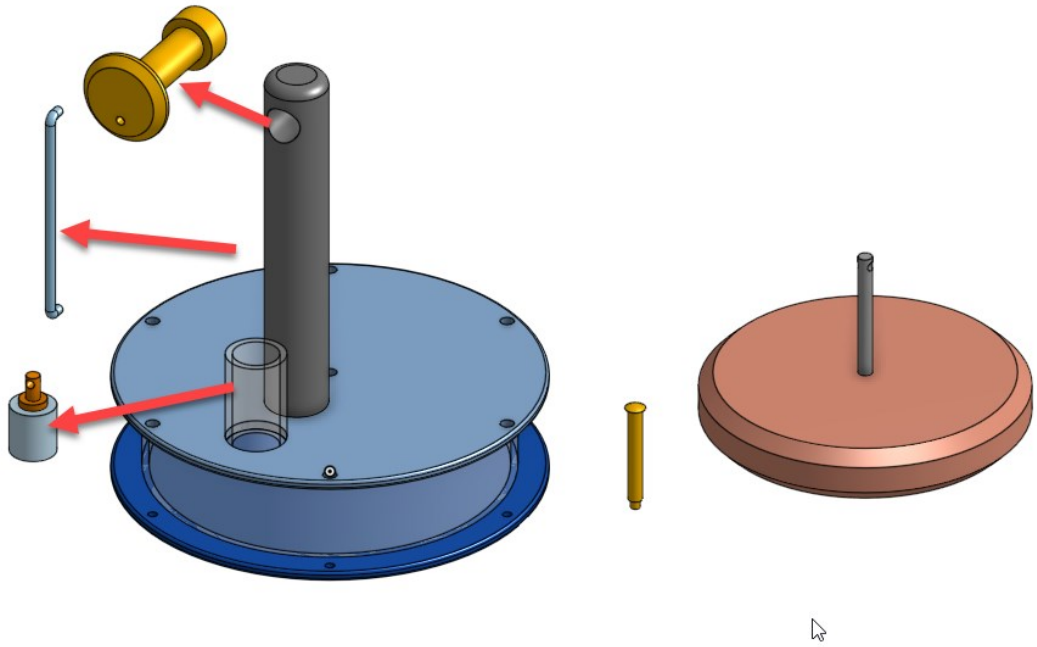

ADDING MATES

1. Launch the **FASTENED** mate command
   Select the lower circular EDGE of the PIN
   Select the lower circular EDGE of the small hole in the LOWER PLATE

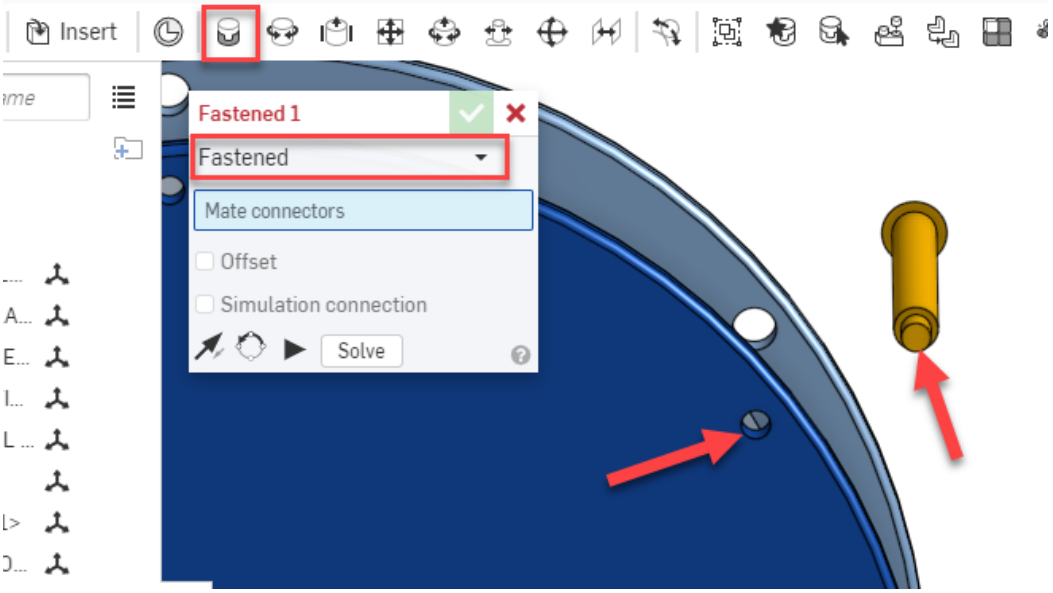

   Click the green checkmark to add the mate
   Close the mate command with the red ✖

2. Launch the **SLIDER** mate command
   Select the lower circular EDGE of the PISTON and the upper circular EDGE of the GLASS TUBE

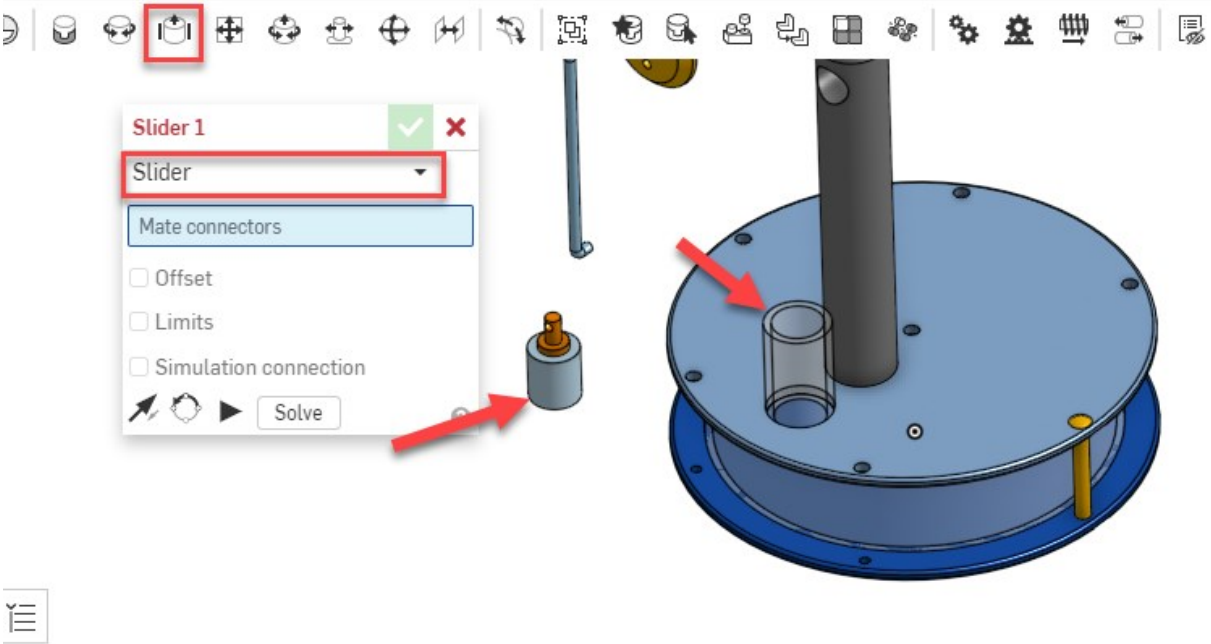

   Complete this mate with the green checkmark (leave the mate command open)

3. Launch the **SLIDER** mate command
   Add a slider mate between the circular FACE of the DISPLACER and the circular FACE of the GLASS SLEEVE
   NOTE: The hole in the ROD-Displacer is mis-aligned by 90 degrees

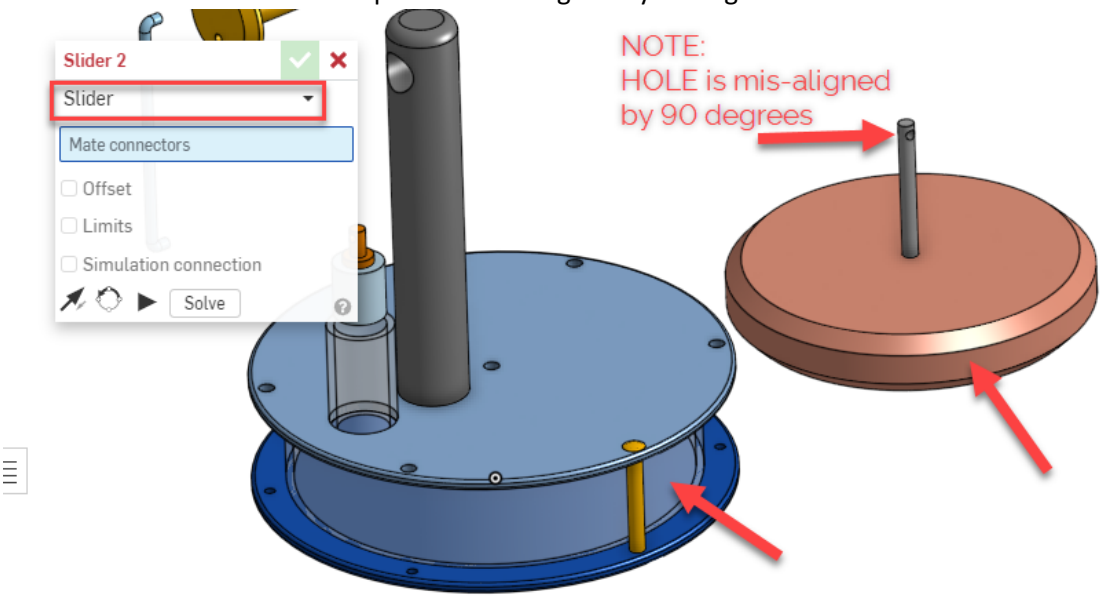

After examining the mate preview, click the button for **"Reorient secondary axis"**
which will rotate the DISPLACER group by 90 degrees

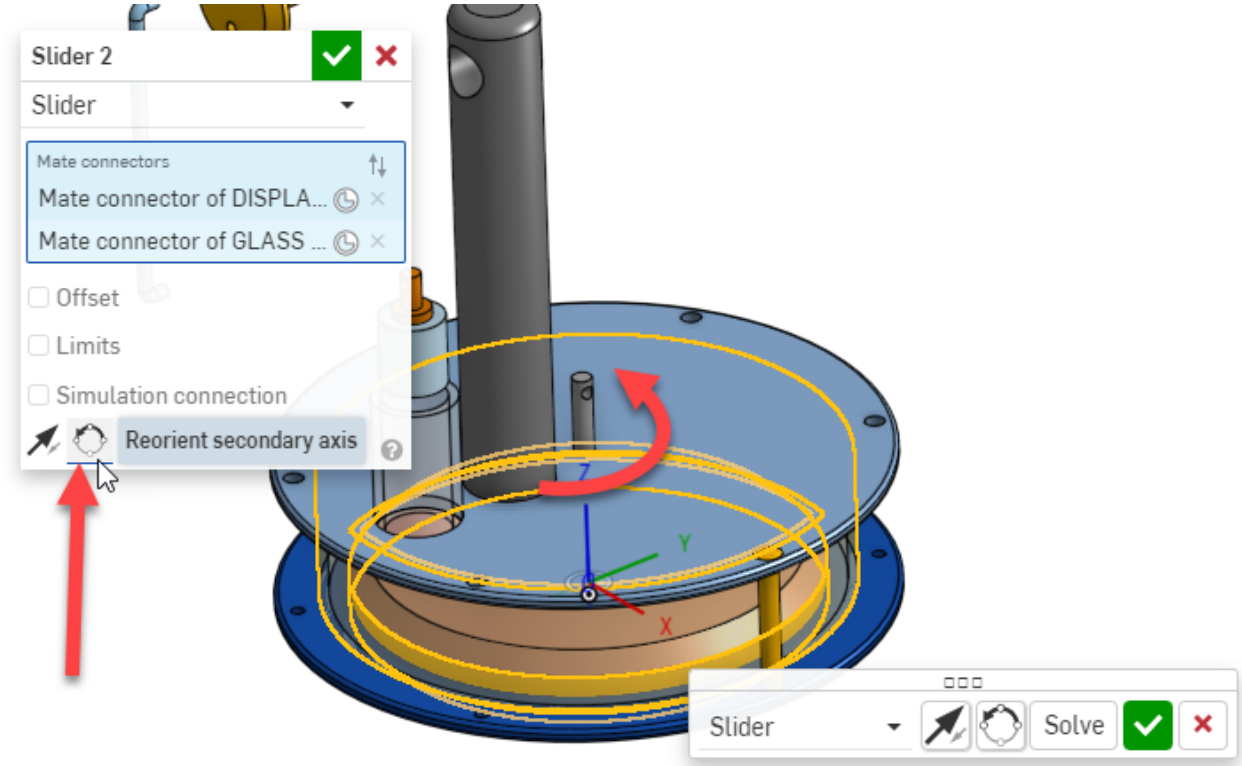

After rotating the part into the correct orientation, hit the green checkmark to apply this mate ✅
Close the MATE command with the RED ❌

4. Launch the **REVOLUTE** mate command
   Select the cylindrical FACE of the HUB near the middle

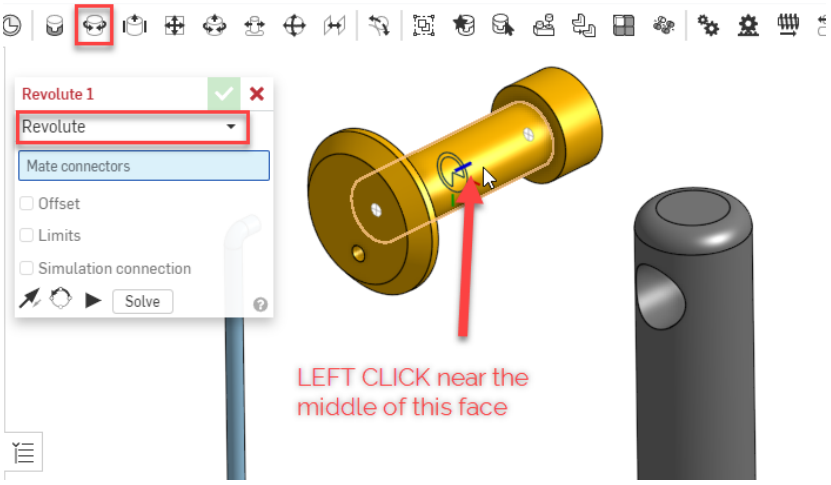

   Select the cylindrical FACE of the hole in the FLYWHEEL POST, near the end of the face

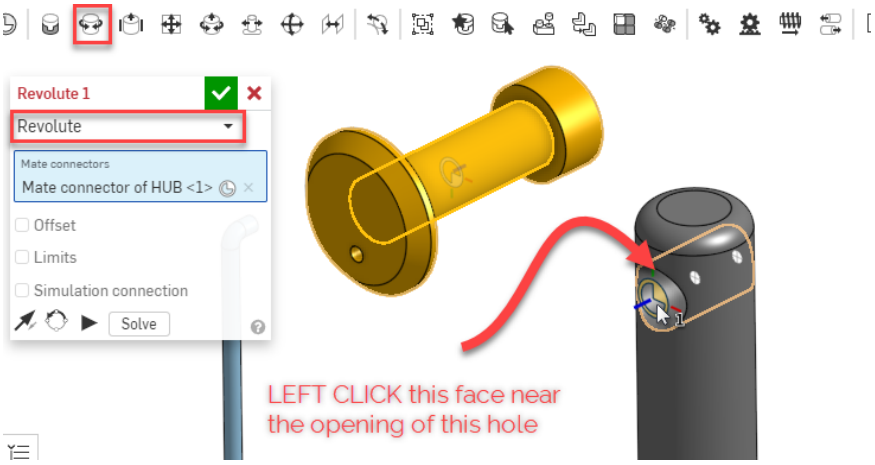

   Use the option for **OFFSET** and set the offset to 4mm

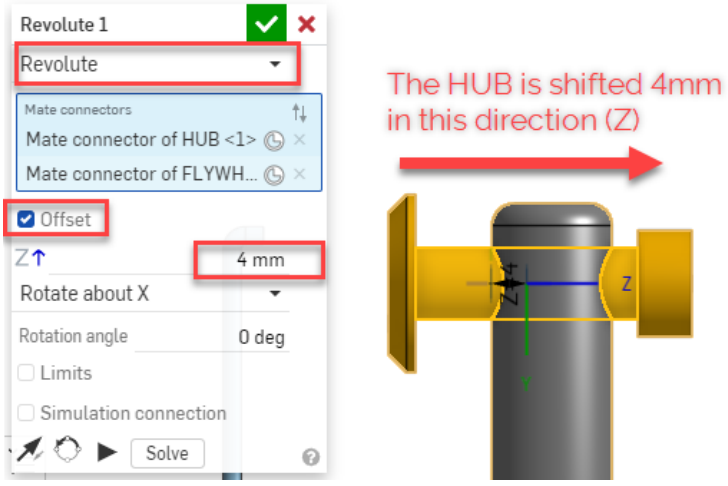

   Complete this mate with the green checkmark

5. Launch the **REVOLUTE** mate command
   Select the circular EDGE of the CONNECTING ROD-FRONT and the lower circular EDGE of the HOLE in the HUB

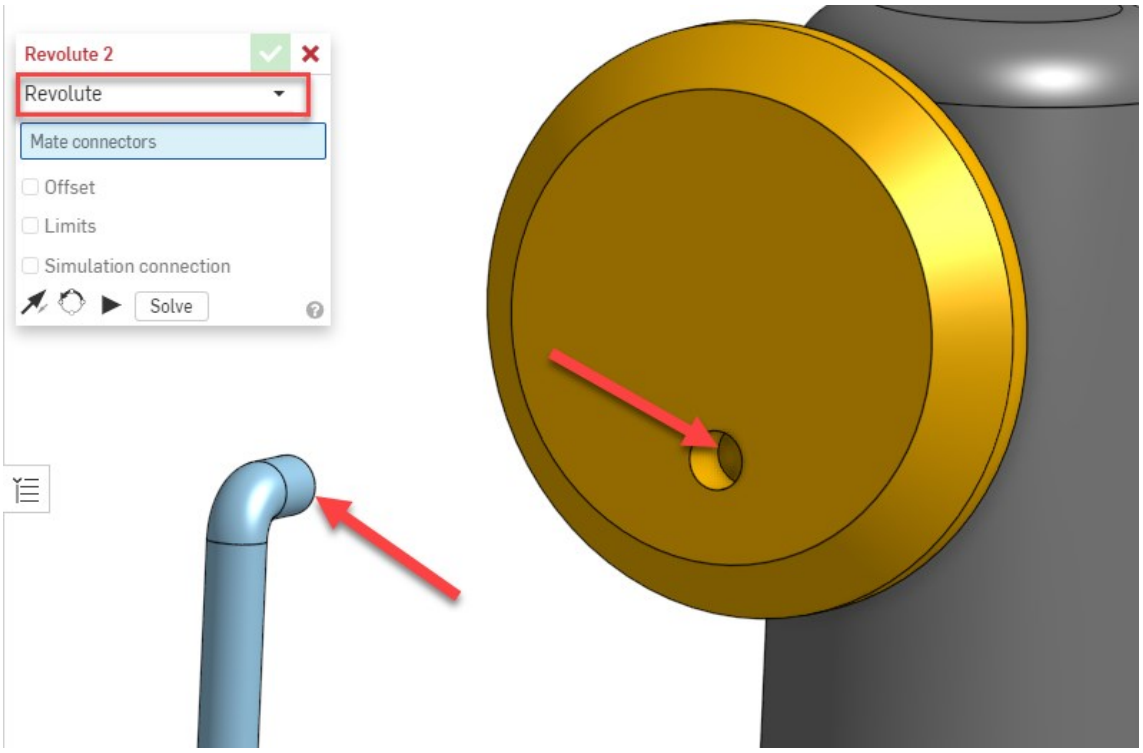

   Complete this mate with the green checkmark ✅

6. Add a **CYLINDRICAL** mate
   Select the FACE of the CONNECTING ROD-FRONT near the end
   and the FACE of the hole in the PISTON ROD, near the opening

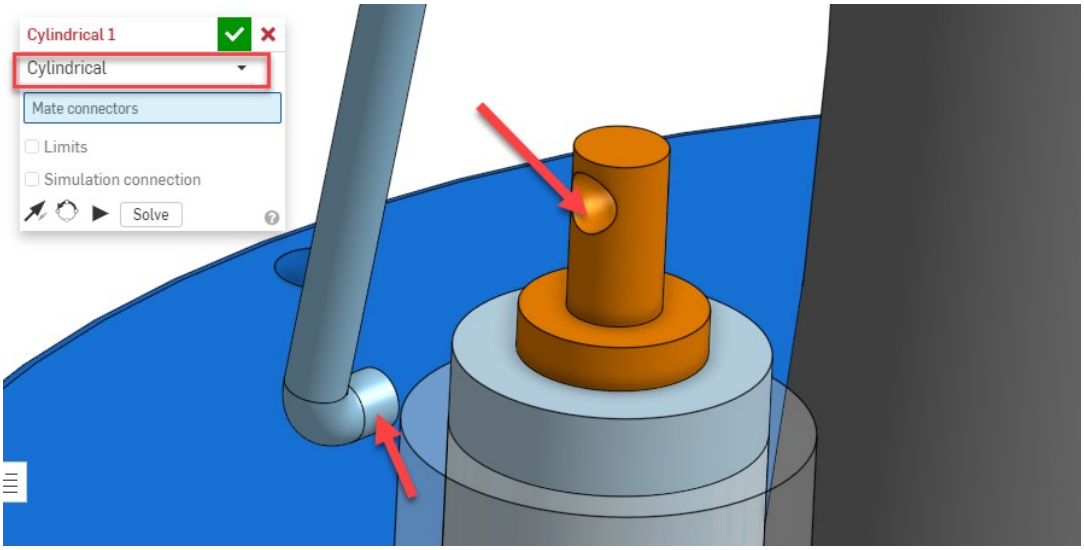

   Complete this mate with the green checkmark ✅

7. Show a **MATE ANIMATION**

Right mouse button on the **Revolute 1** mate in the tree and choose ANIMATE

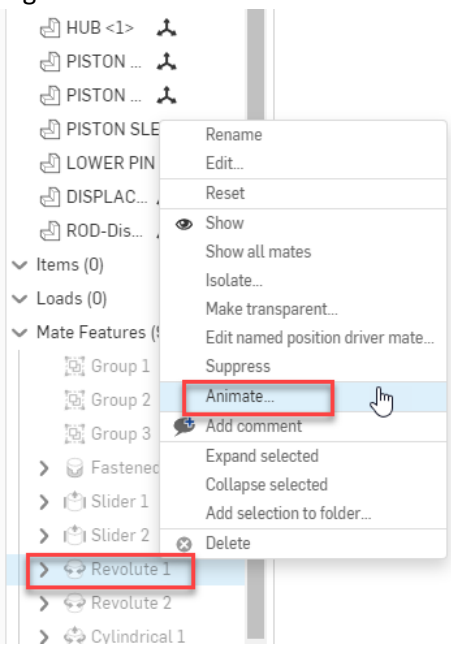

Choose the option for **LOOP**

Choose **PLAY** and examine the behavior of the assembly.

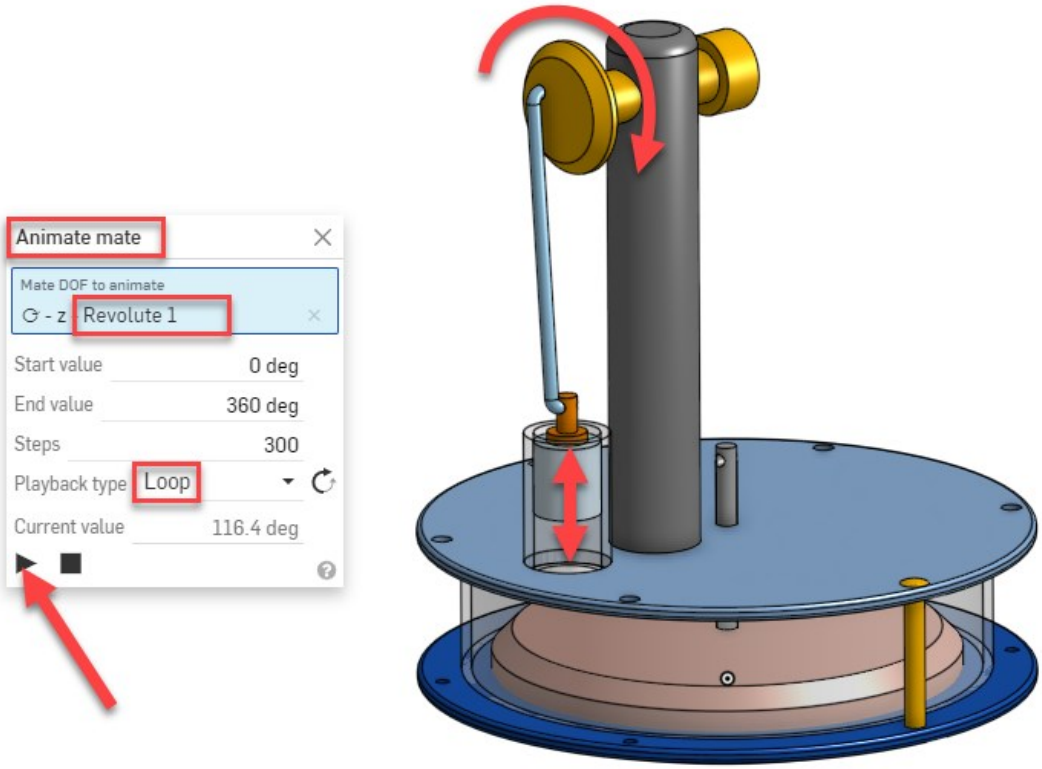

EXIT “Animate mate” mode when finished

REPLICATE

1. Launch the command **REPLICATE**



Select the LOWER PIN under **INSTANCES**
Confirm that **Fastened 1** has been selected in the "Mates to be matched" box
Choose the option **Match edges on face**
Select the bottom face of LOWER PLATE
Hit the green checkmark to finish this command

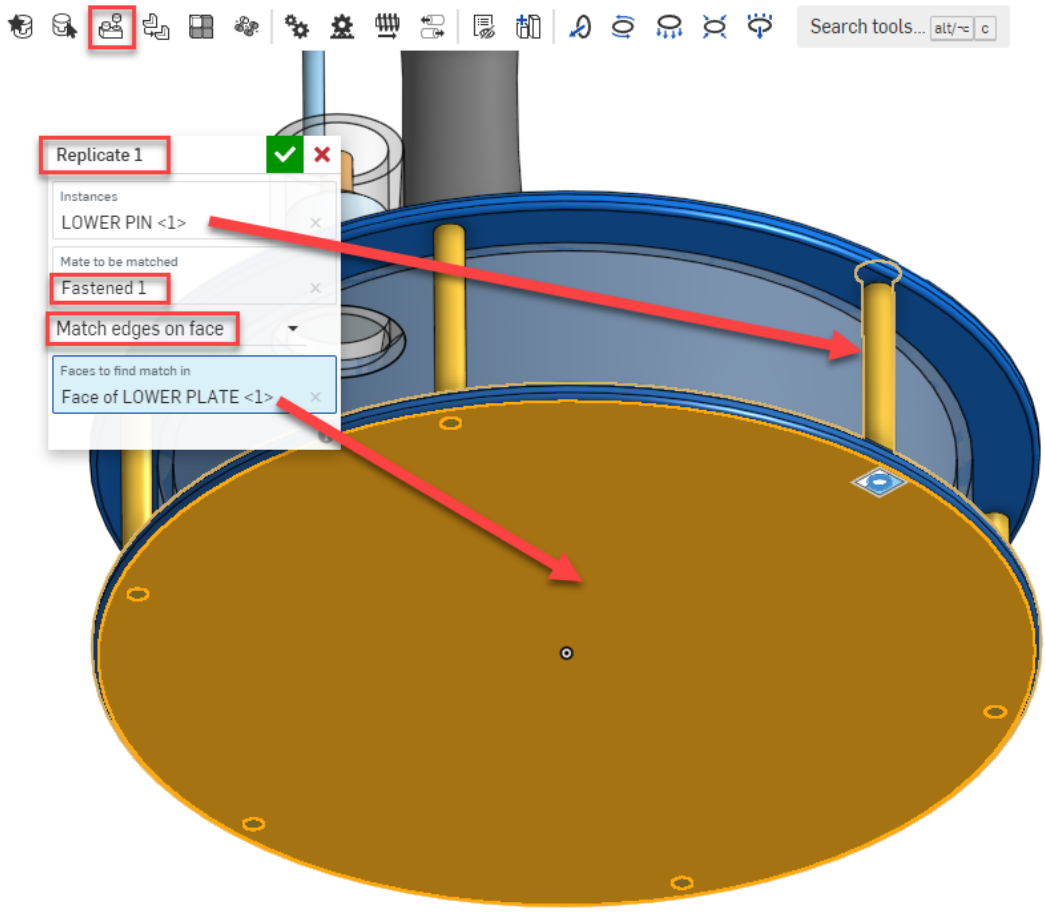

We now see **6 instances** of the **LOWER PIN** - one in each of the holes on the LOWER PLATE

FINAL MATES

1. Launch the **INSERT** command
   Select the Part Studio named C ROD-REAR and then LEFT CLICK in the graphics area
   (leave the INSERT command open)

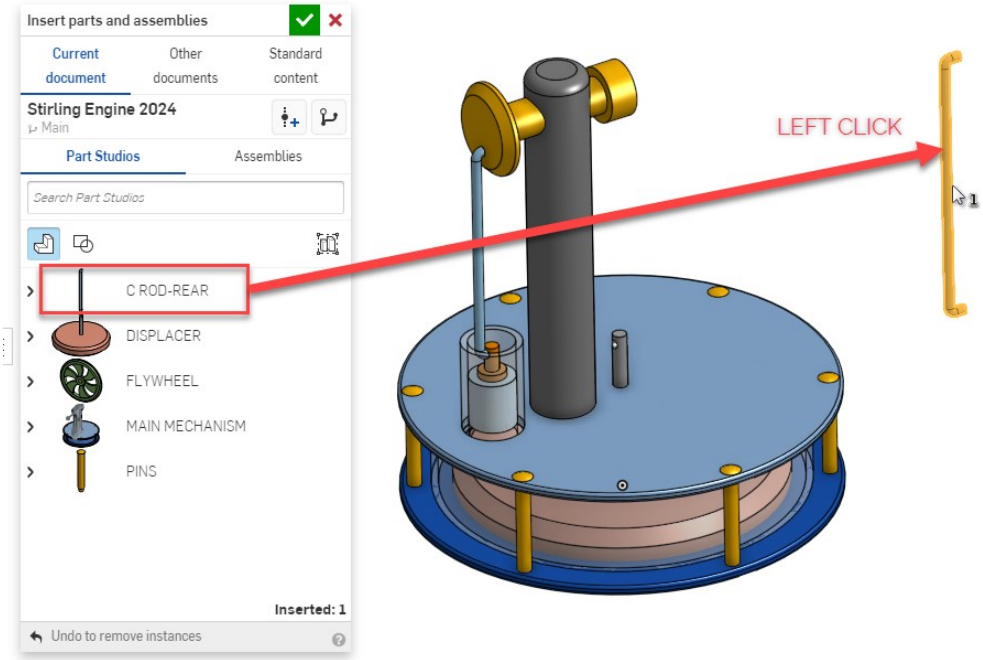

2. With the **INSERT** command still open
   Select the Part Studio named FLYWHEEL and then LEFT CLICK in the graphics area

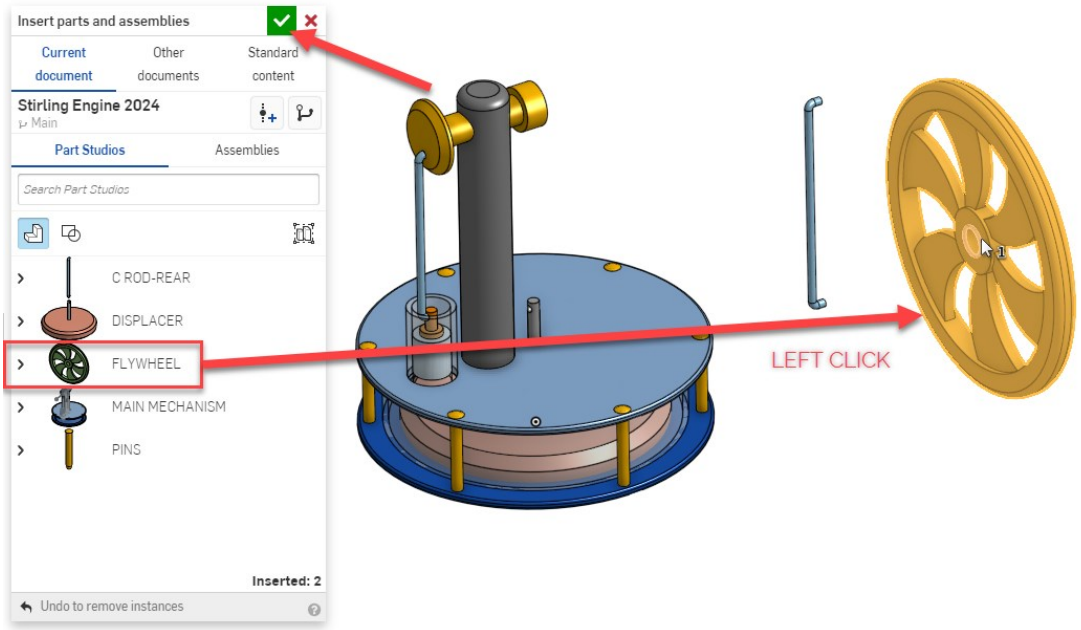

Hit the green checkmark ✔ to close the INSERT command

3. Launch the **REVOLUTE** mate command
   Select the circular edge of the CONNECTING ROD and the lower circular edge of the HOLE in the HUB

   Click the option for **FLIP PRIMARY AXIS**

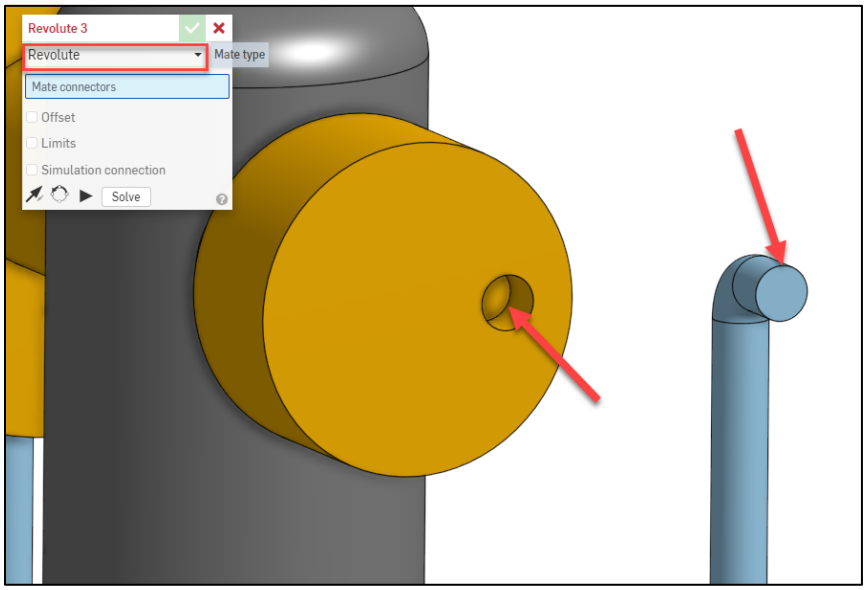

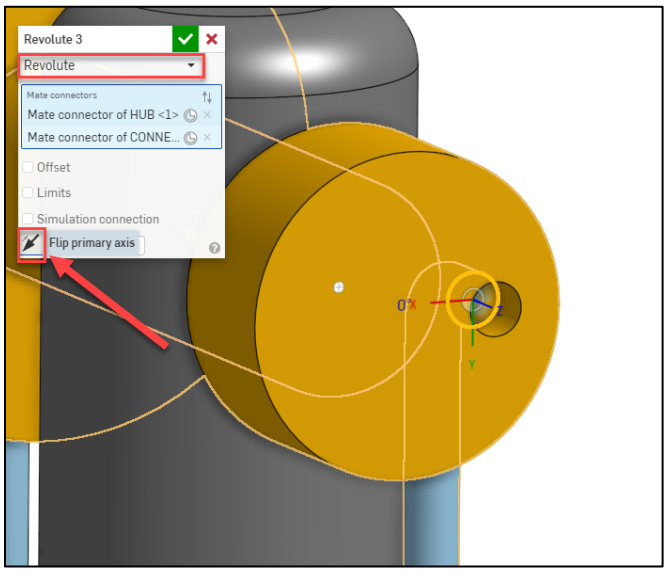

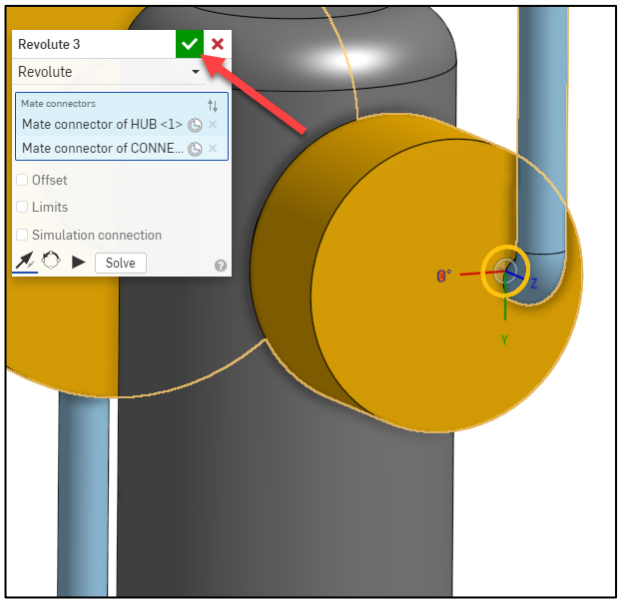

Hit the green checkmark to finish this mate

4. (optional) **REPOSITION** the CONNECTING ROD-REAR component to the correct orientation

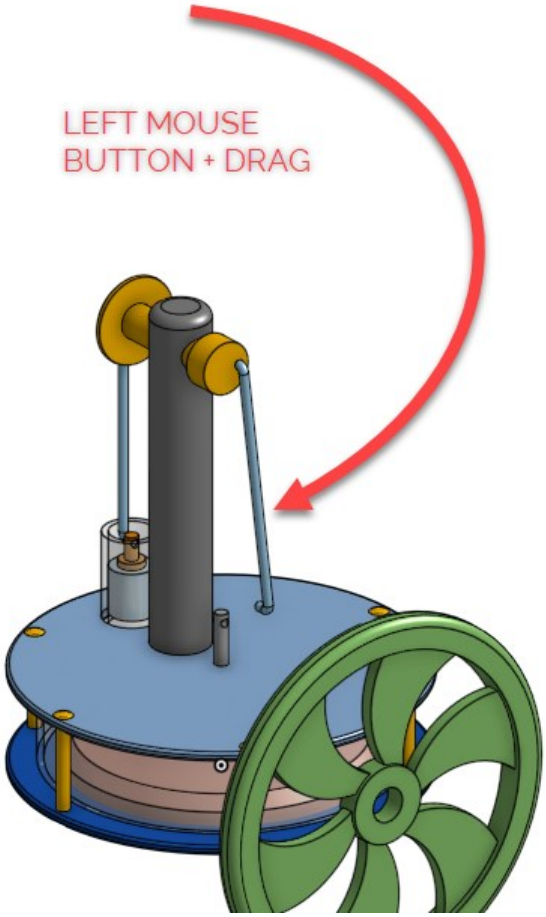

5. Launch the **CYLINDRICAL** mate command
   Select the cylindrical face of the CONNECTING ROD-REAR
   and the cylindrical face of the HOLE in the ROD-Displacer

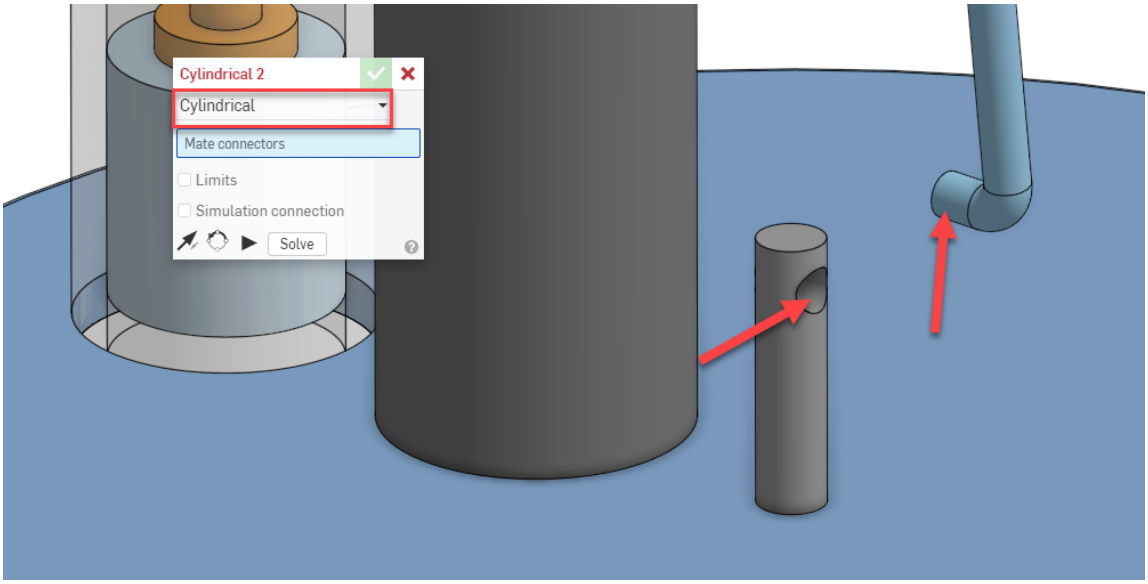

Hit the green checkmark ✅ to finish this mate, then exit the mate command with the red ❌

NOTE: The CONNECTING ROD-REAR is too long, causing the DISPLACER group to interfere with the LOWER PLATE. This is expected and we will resolve this in a few steps.

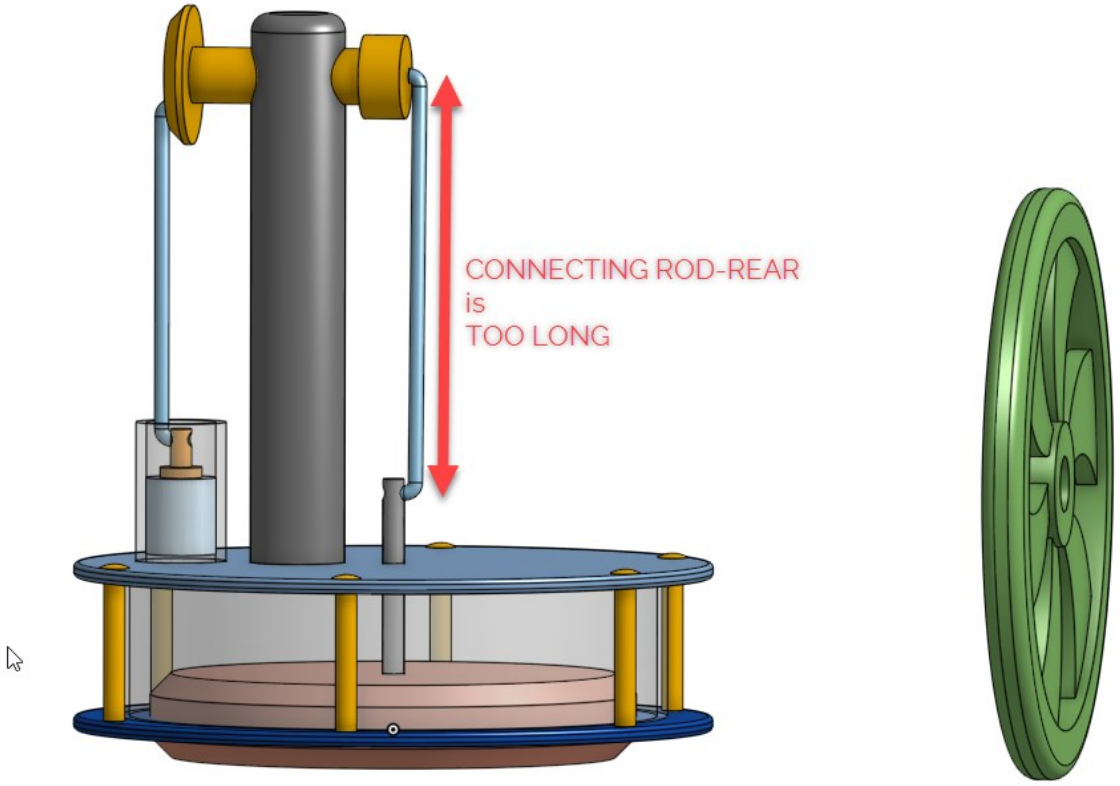

6. Launch the **FASTENED** mate command
   Select front edge of the FLYWHEEL and the underside edge of the HUB

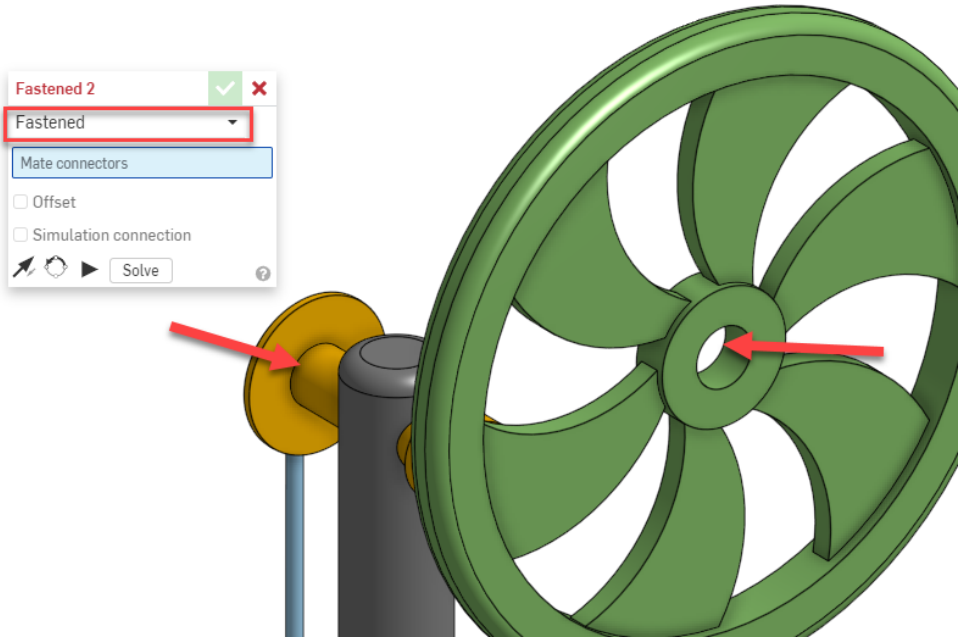

7. Show **MATE ANIMATION**

Right mouse button on the **Revolute 1** mate in the tree and choose ANIMATE

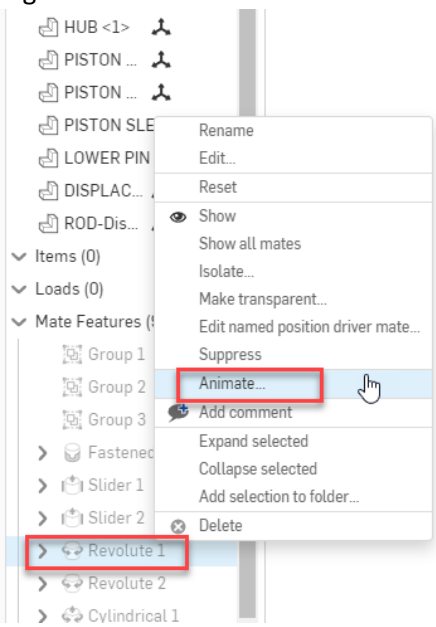

Choose the option for **LOOP**

Choose **PLAY** and examine the behavior of the assembly.

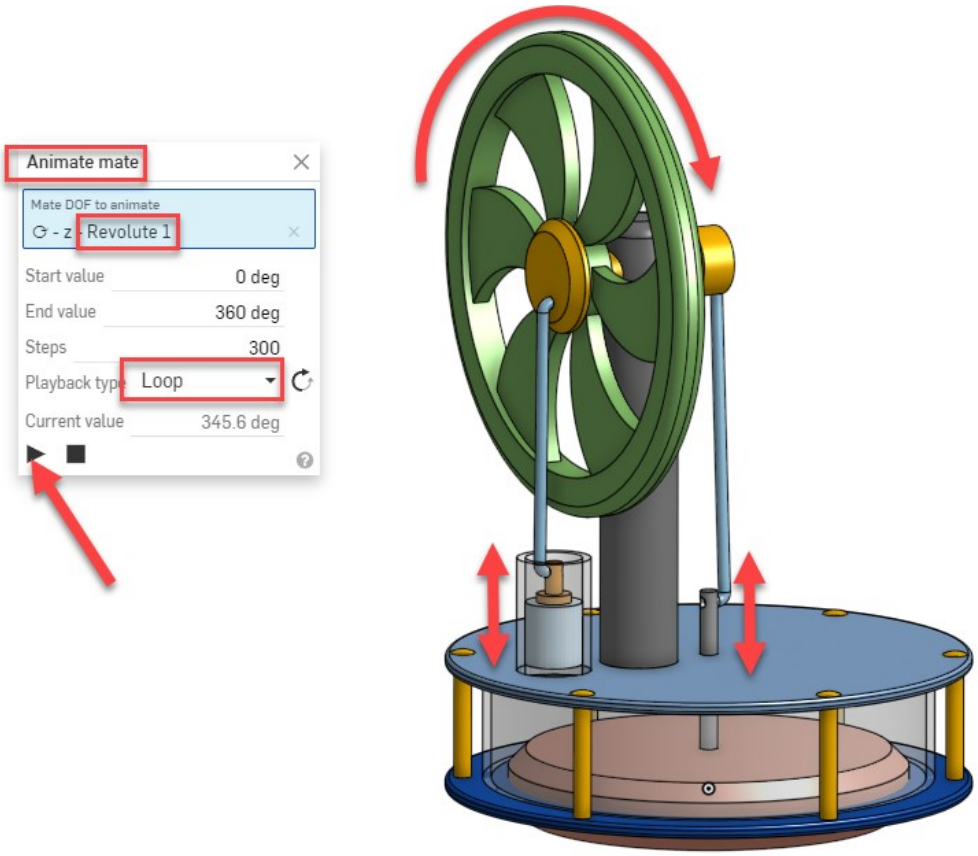

EXIT “Animate mate” mode when finished

MODIFYING PARTS – Connecting Rod - REAR

1. Switch to the TAB called **C ROD-REAR**



2. **DOUBLE CLICK** on the sketch representing the SWEEP PATH to enter **EDIT SKETCH MODE**
   Change the driving dimension for 60mm to 50mm

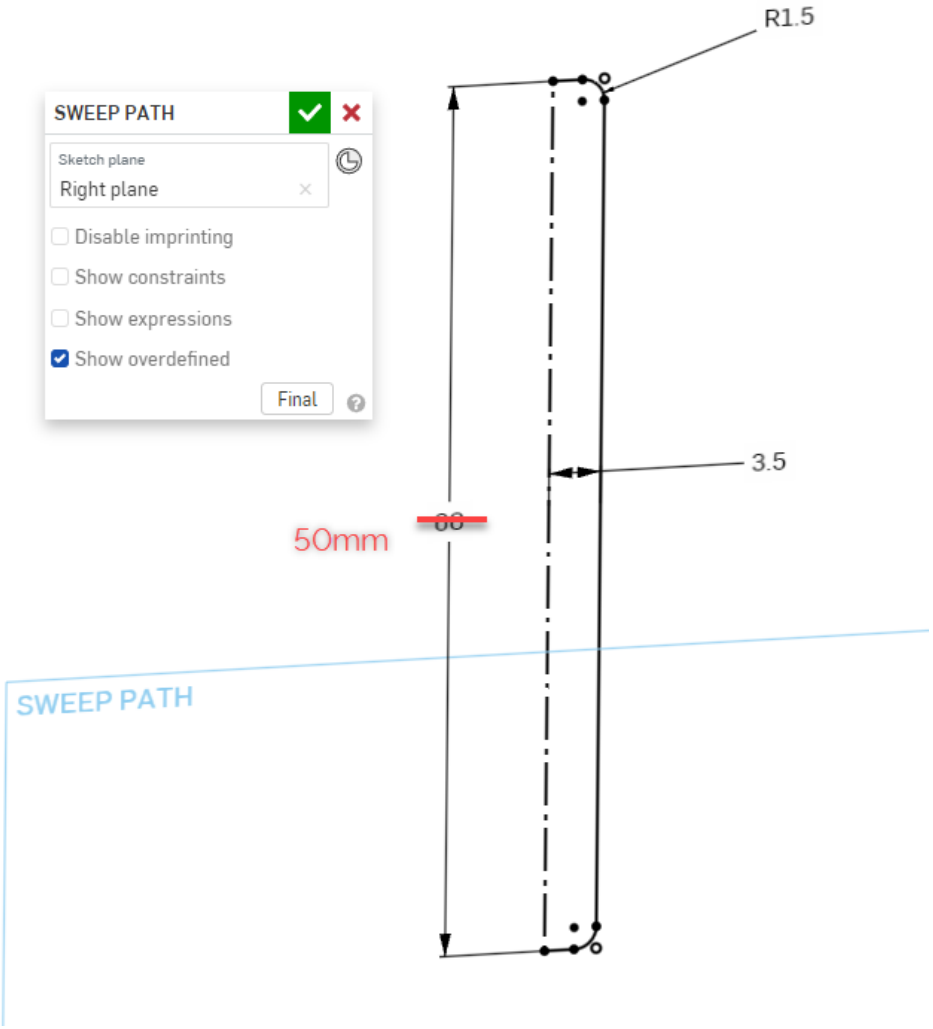

3. **Exit this sketch**

4. Switch to the TAB called **FLYWHEEL**



5. **DOUBLE CLICK** on the sketch representing the REVOLVE to enter **EDIT SKETCH MODE**
   Change the driving dimension for 85mm to 80mm

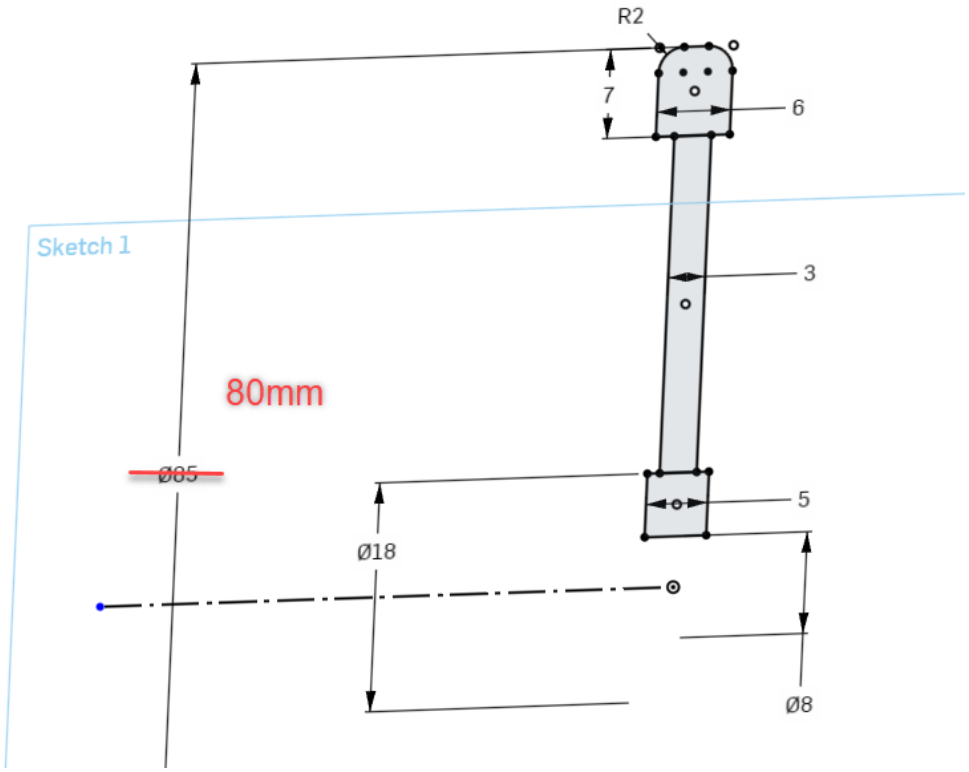

6. **Exit this sketch**

7. Switch to the TAB called **MAIN ASSM**



8. The 2 problems identified earlier have been resolved

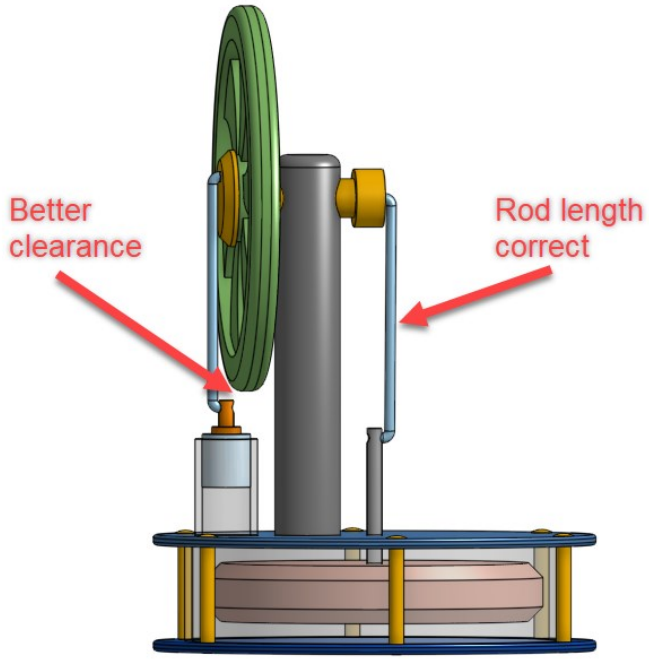

EXPORTING PARTS for 3D Printing/Manufacturing

1. Right Mouse Button on the HUB in the graphics area and choose **EXPORT**

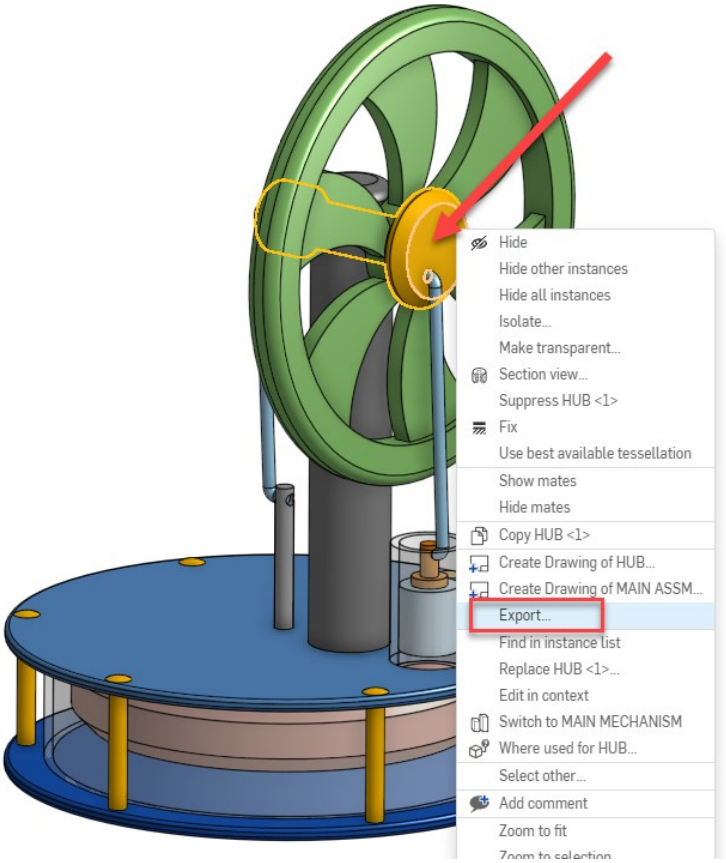

OR - Alternately, you could **EXPORT** a part from the list of PARTS in a Part Studio

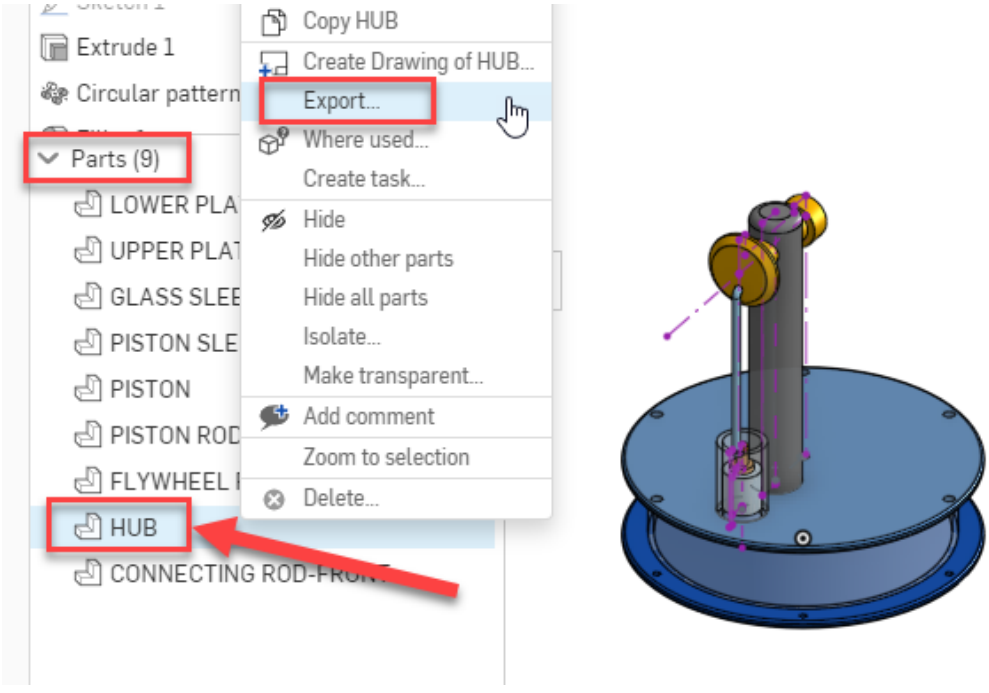

2. Set the desired FILE NAME, FORMAT, UNITS and DOWNLOAD OPTIONS for your EXPORT

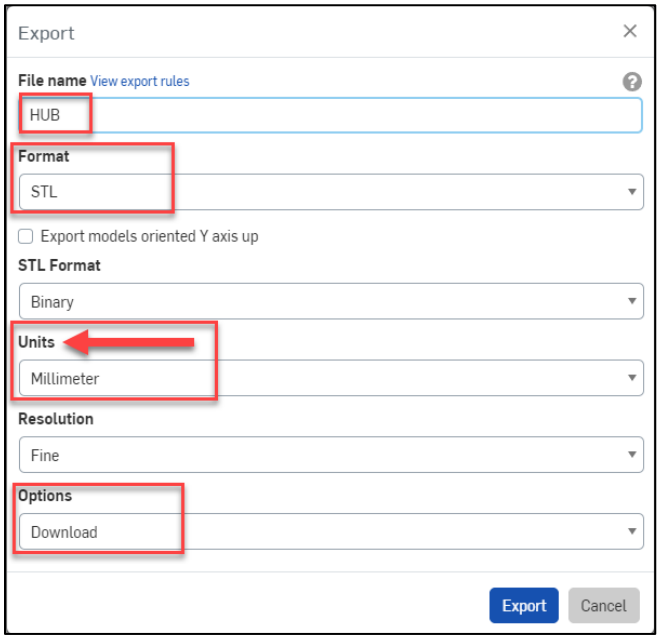

3. This file can now be **IMPORTED** to your 3D Printer SLICER or your CNC software

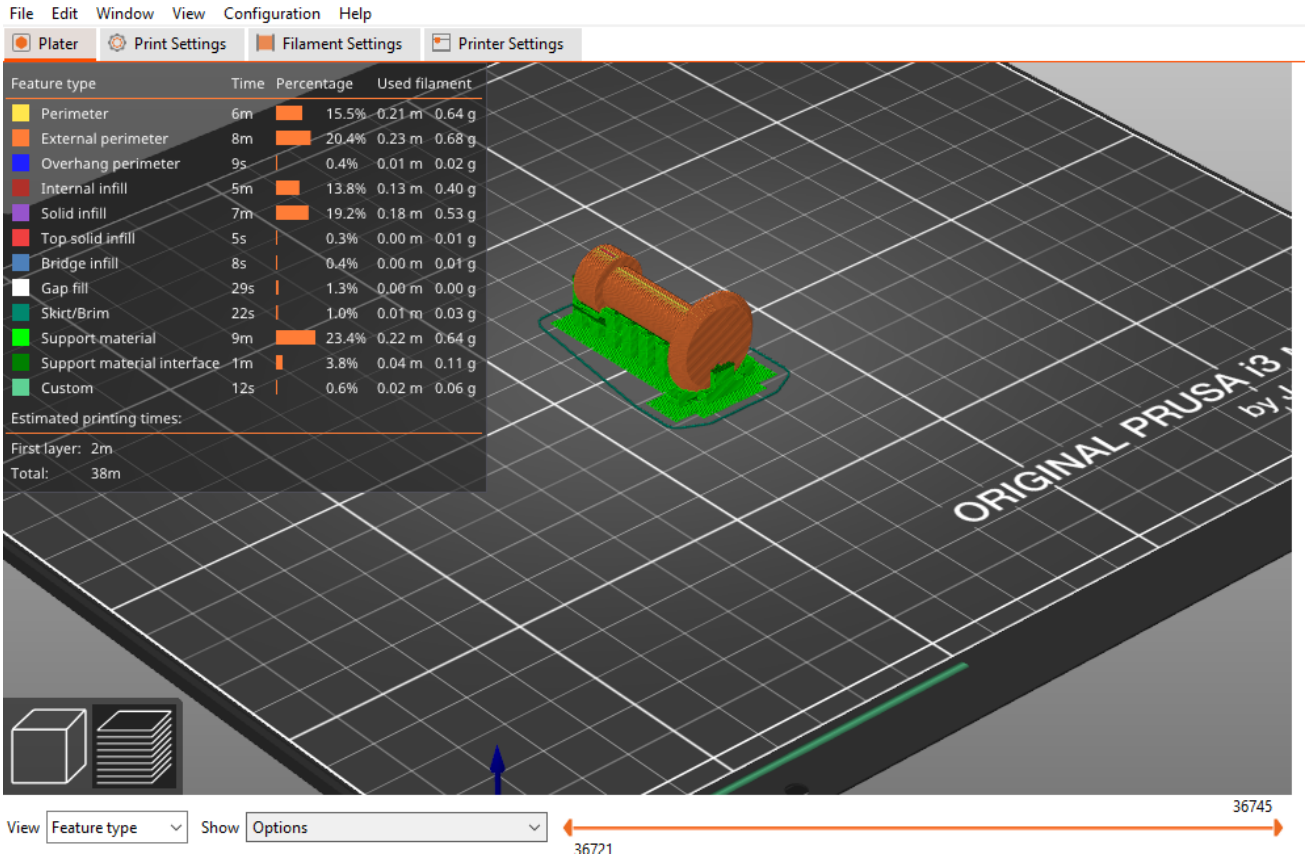

Conclusion

Congratulations! You have now successfully completed your first moving mechanism project in Onshape. Along the way you have learned about:

- Onshape fundamentals
- Valuable SHORTCUT KEYS
- Extrudes, Revolves, Cuts, Sweeps
- Circular Patterns
- Adding fillets
- Assigning material & colors
- Creating multiple parts in the same part studio
- Layout Sketches and Sketch Colors
- Managing multiple TABS
- Inserting parts into an assembly
- Using GROUP
- Mate Connector Basics
- Using several MATE types
- Animating mates
- Using Replicate
- Updating parts and seeing these changes in the assembly
- Exporting parts to STL or 3MF

After finishing this project, consider posting an image of your results on social media, and tagging #onshape and #TooTallToby

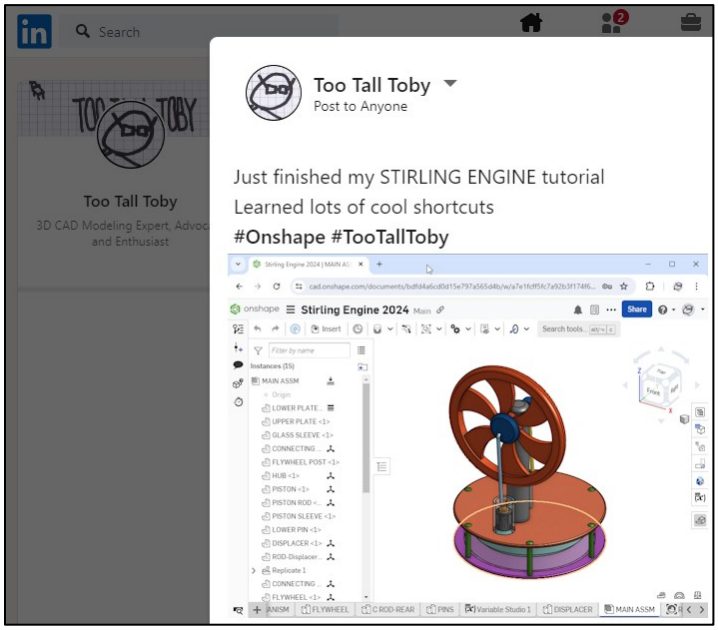

We hope you enjoyed this project!

Afterword

This tutorial was organized in a way to give the user the opportunity to work with a variety of different tools and features. In order to accommodate this organization, there were a few procedures that did not follow what we could consider “best practices in Onshape”, including:

1. The hole pattern in the UPPER PLATE and LOWER PLATE could have been created as one single pattern, to ensure we would always have the same number of holes.

2. The fillet in the UPPER PLATE and LOWER PLATE could have been created as one single fillet feature, to ensure they would always use the same sized fillet.

3. The LOWER PIN, DISPLACER, ROD-Displacer, CONNECTING ROD-REAR, and FLYWHEEL components should all have references back to the geometry of the MAIN MECHANISM. These components are all meant to work and fit together, so we probably would have modeled all the components in one part studio.

If we did use multiple part studios, we could use tools like VARIABLE STUDIO, LAYOUT SKETCHES, the DERIVED feature, and EDIT IN CONTEXT to ensure that these parts all “fit together” and update properly when changes are made.

Visit www.Onshape.com for more Onshape learning resources

Visit www.TooTallToby.com for 2D to 3D Practice Models and live CAD vs CAD competitions

Good luck on your CAD journey!

- Toby