onshape®

The Engineering Leader's Guide to Data Management:

How Cloud-Native Design Tools Eliminate the Bottlenecks of Traditional PDM Systems

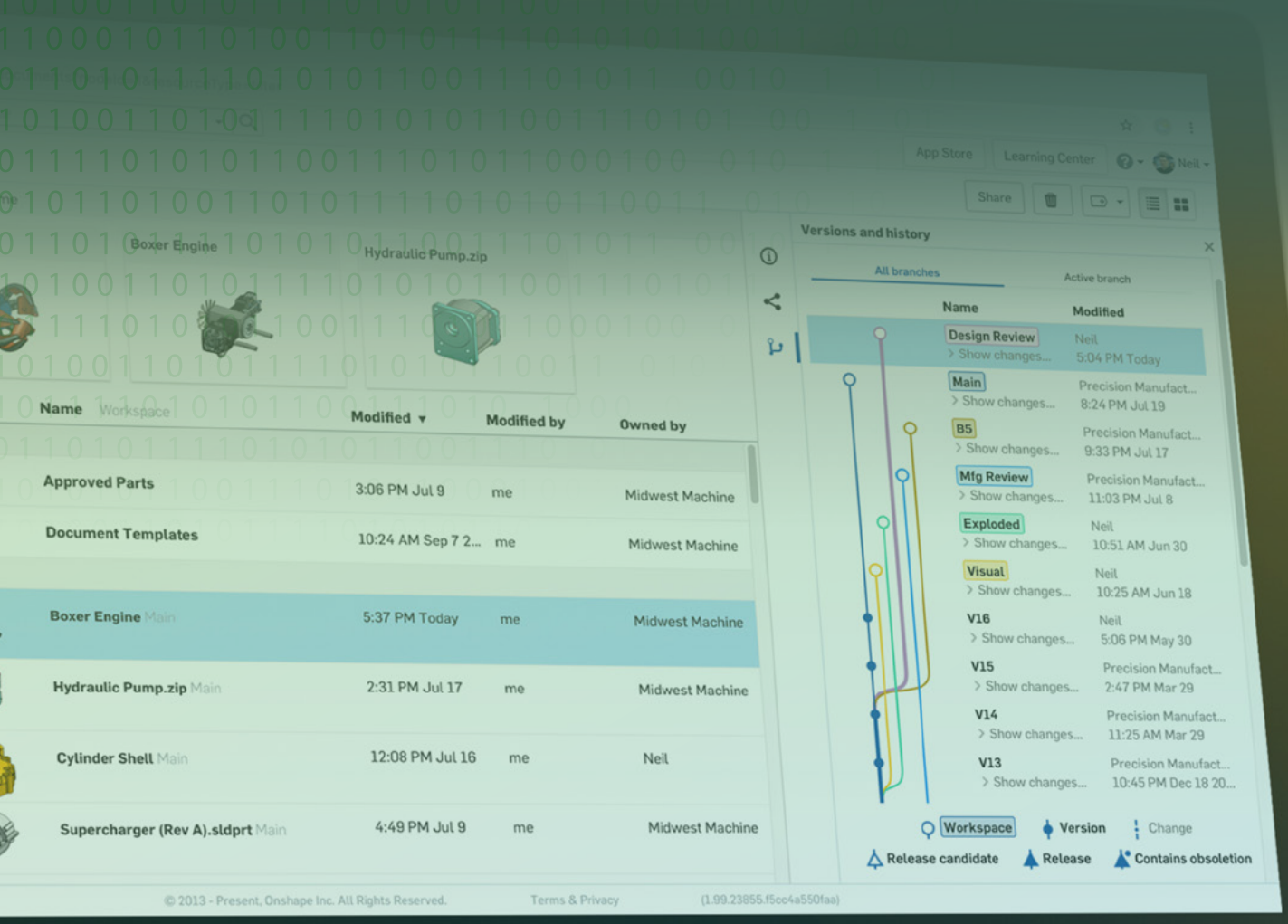

Contents

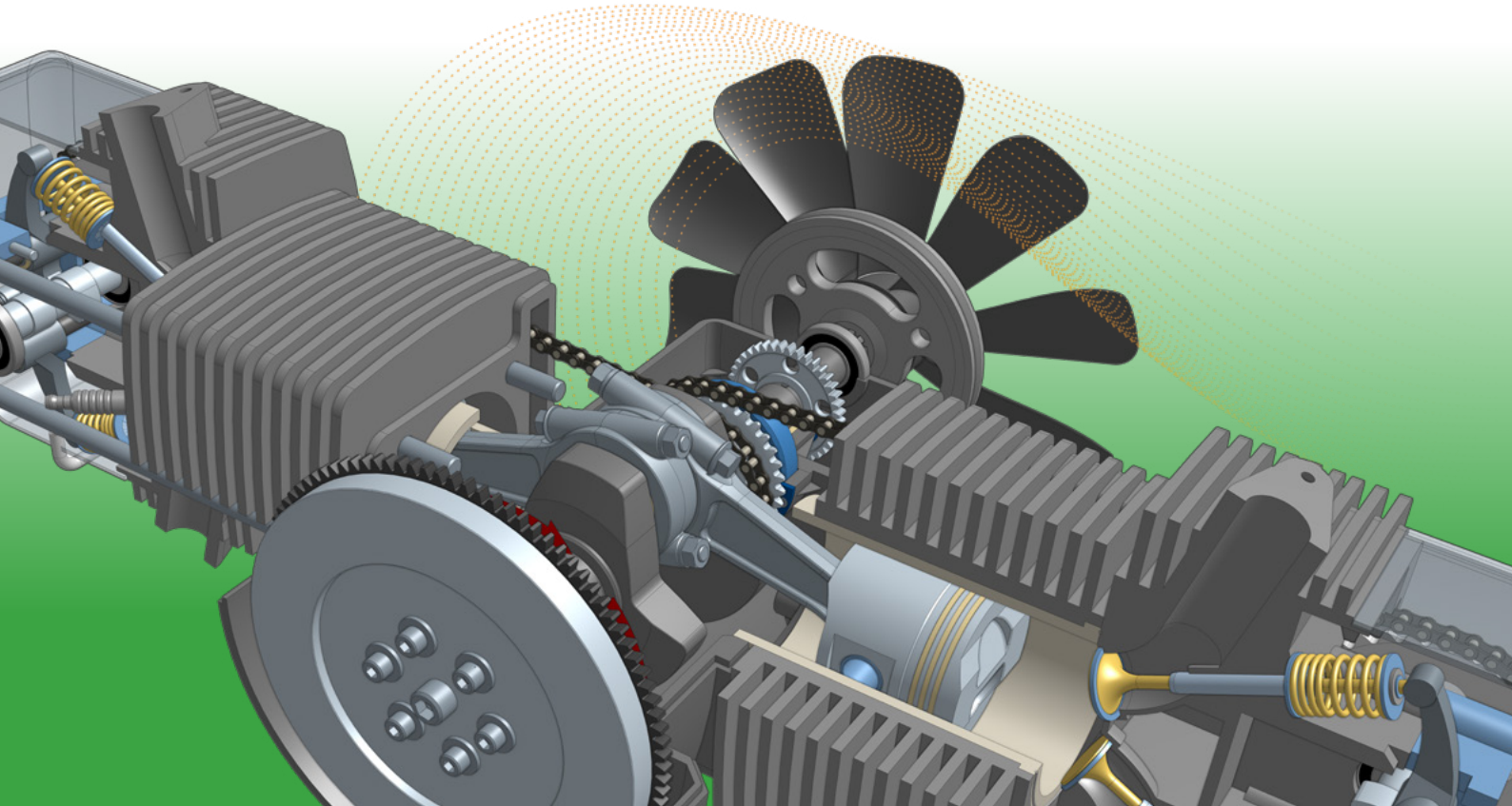

Do Product Data Management (PDM) Systems Help You Avoid Costly Version Control Errors?

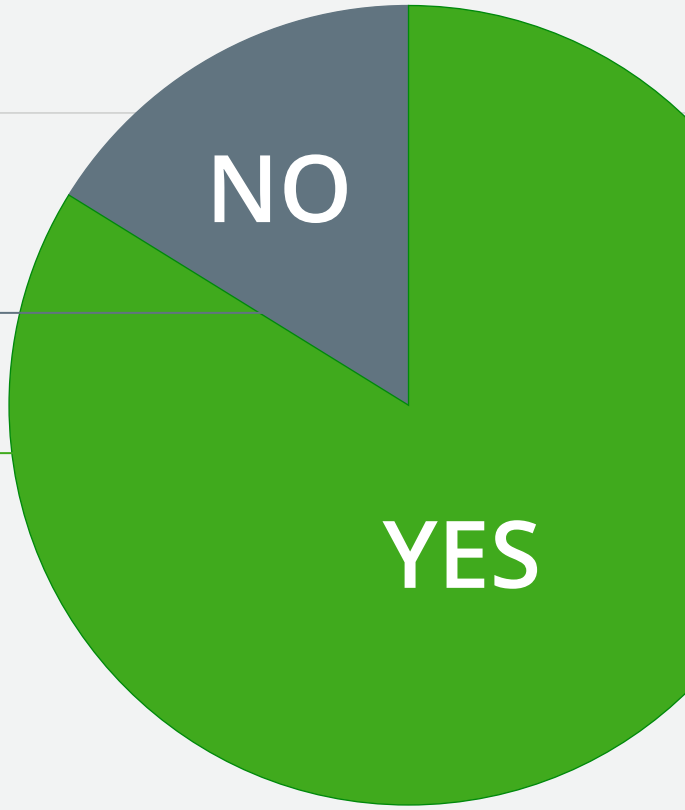

16%

84%

Introduction

Surprisingly, the product development world, which places a high value on accuracy and precision, is still struggling with version control and enabling multiple contributors in a project to quickly get to the right design data. For complex design projects, working without a reliable data management system in place is an invitation for chaos.

When people decide to pursue a career in engineering or design, they're thinking mostly about creating innovative products – not spending endless hours managing their design files. It's not surprising then that CAD tools get most of the attention when companies are evaluating software platforms for their product development teams. Much like simulation, data management solutions have historically been relegated to being an afterthought.

In *The State of Product Development and Hardware Design 2021*, an independent research report on the design and manufacturing industry, 8 out of 10 companies said they need to reduce errors resulting from working on the wrong version of a design or receiving important project information too late.

All too often, productivity tools that are meant to accelerate product development are ironically slowing down design teams and processes. In best-case scenarios, mistakenly manufacturing the wrong part can lead to wasted time, materials, and money. In worst-case scenarios, version control problems can lead to flawed products, potential recalls and possible harm to customers.

The good news is that by employing cloud-native technologies, most data management problems can be proactively minimized or prevented altogether.

In this introductory guide, you'll learn the critical role that data management plays at every stage of the product design and manufacturing process. We'll review all the key factors to consider when choosing the best software solution for your company. This book also compares traditional file-based Product Data Management (PDM) systems to alternative cloud-native and mobile technologies that offer unprecedented benefits and advantages.

What Exactly Does "Cloud-Native" Mean?

Today, almost all technical software vendors claim to be cloud-powered or Software-as-a-Service (SaaS) enabled. However, the truth is that most of these software marketing claims amount to minor additions to old technology, a so-called cloud-assisted approach. Old technology is installed, typically monolithic software, often requiring customers to maintain a complex server network. Some hybrid-cloud products disguise the installation, either by downloading software and uploading data in the background, or by hosting the installed software elsewhere and streaming it.

Conversely, cloud-native software runs entirely in the cloud and the data is also stored completely in the cloud. The software is a collection of microservices that are multi-tenant, allowing rapid scaling and instant replacement of "broken" microservices. Data is stored incrementally which means any state of data that ever existed can be quickly restored. Users of cloud-native platforms do not experience the negative impact of software crashes.

These productivity and efficiency benefits have long proven themselves useful in business software such as Salesforce, Zendesk, Asana, JIRA, Workday, MIcrosoft Office 365, Google G Suite, and many others.

While hybrid software products can provide some minor incremental benefits, only a true cloud-native platform can provide transformative benefits that can be quantified. Some of these benefits include:

- Browser access with no hardware or OS restrictions
- Rapid scaling and no admin
- Automatic updates, no downloads,
- Synchronous user access
- All modifications are recorded
- Intelligent data warehouse
- Controlled user access

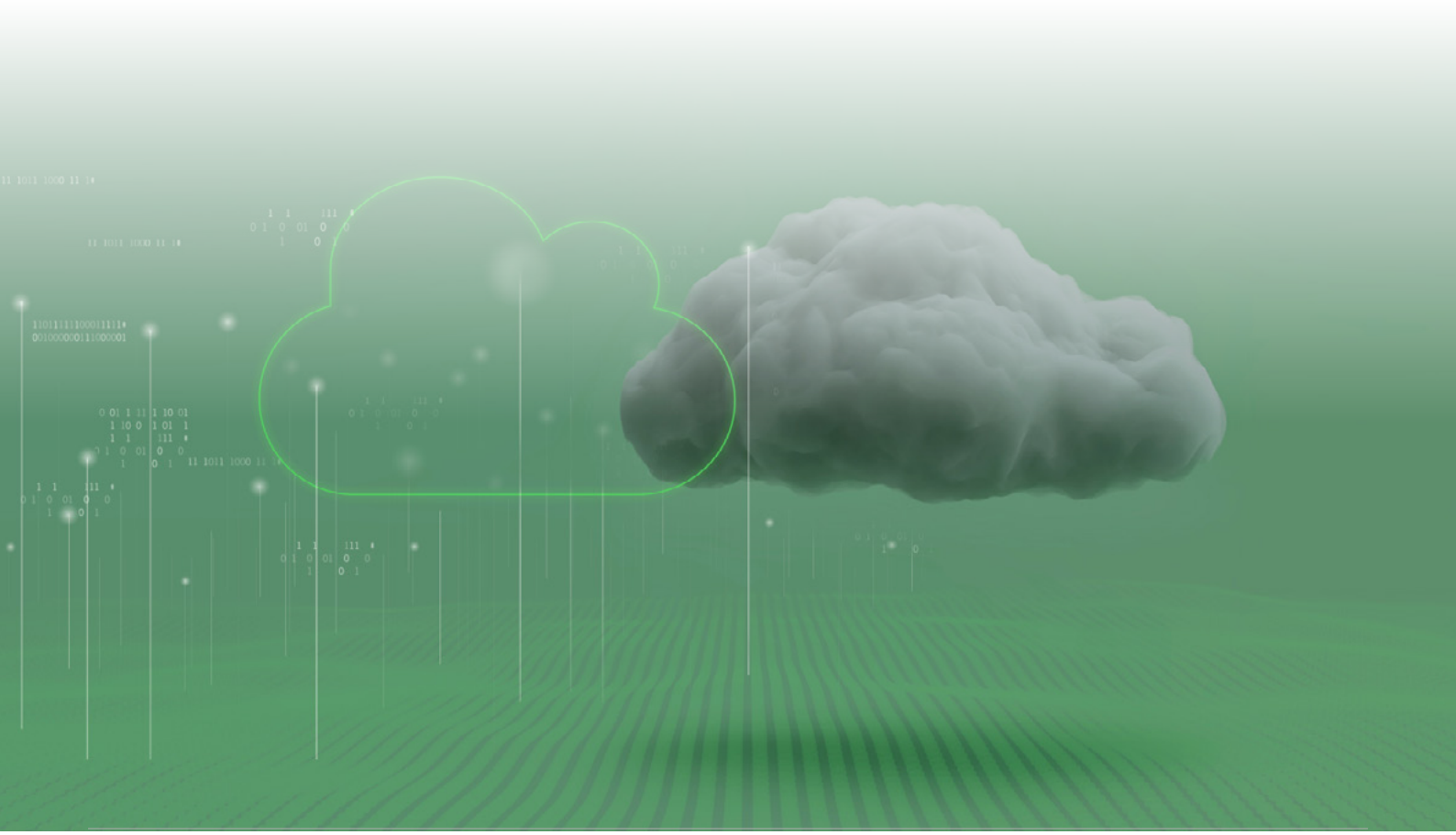

onshape®

1 Managing Data to Improve Product Development

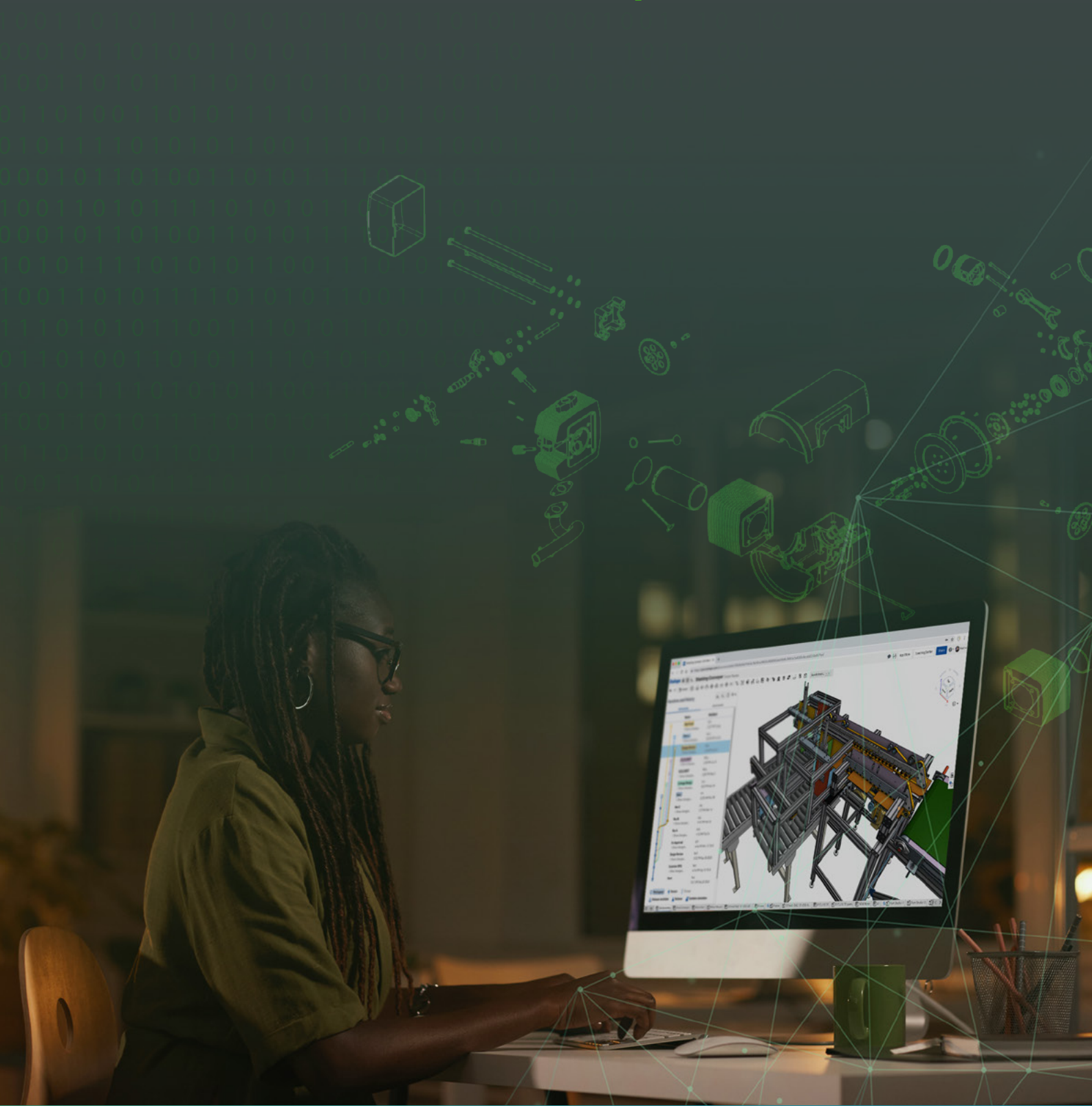

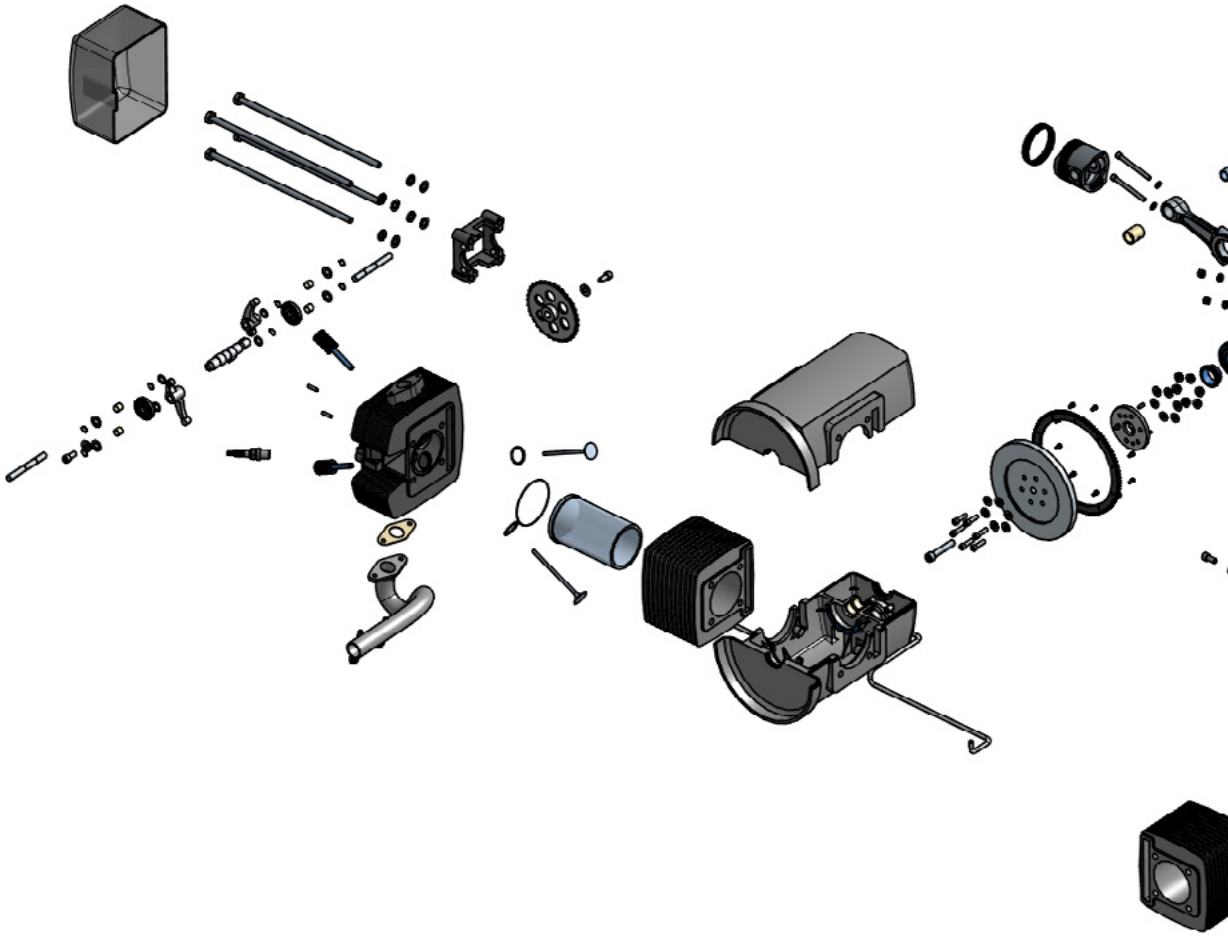

Managing Your Most Valuable Design Assets

The benefits of CAD and digital design automation tools are well documented – CAD helps you design better products faster, with fewer errors, scrap, and rework. 3D design data is easier to understand, easier to modify, and easier to verify for fit and function. For non-technical users such as sales and marketing, and for decision makers such as executives and customers, 3D design data removes ambiguity and visually explains how a product will look and work.

The less glamorous side of 3D CAD, however, is not often discussed. Working in CAD produces an enormous volume of data. Remarkably, it's rarely even mentioned at all (especially by CAD vendors). Companies with hundreds of products may have thousands, or sometimes millions of parts, assemblies and drawings.

Physical drawings, of course, are how products were documented in the past. Before CAD, drawings were approved by a physical signature on a print and stored in a drawing cabinet under lock and key. If you needed a copy of a drawing, you had to ask for the cabinet keys and create a blueprint of the master copy.

CAD technology has significantly advanced product development, but in many companies, the same process that was used to manage paper drawings has simply been replicated with digital files. There now might be less physical clutter, but the organizational chaos hasn't gone away.

The challenges and risks of manually managing design data are great.

As designs go from concept to production, more iterations and variations are produced, more disciplines are involved, and myriad interdependencies are created.

Keeping track of the mountains of data produced by your design teams and your CAD system can quickly become overwhelming. A simple project containing just 10 assemblies, 40 parts and a drawing for each one will produce 100 individual files on your hard drive for every version and revision of the design. Before you know it, those 100 files become thousands, and the margin for error increases exponentially.

Computers are good at automating mundane tasks, so it makes perfect sense that each CAD vendor would create their own software tools to help manage their proprietary data files.

Unfortunately, Product Data Management (PDM) software has always been treated as an afterthought by most software vendors – they build the CAD system first, then worry about managing the files later.

While external add-on PDM software does indeed provide many benefits – reducing the number of errors and frustrations detailed above – it comes with a hefty price tag. There is the initial outlay, ongoing maintenance payments, training, and consultancy fees to get you up and running, plus the dedicated servers, IT infrastructure requirements and annual PDM maintenance fees per user. (For a more detailed breakdown of PDM costs, see the "Sticker Shock: The Invisible Costs of CAD" infographic.)

Without question, CAD files are the lifeblood of most product development. So, managing these files effectively and controlling who has access to them, who can modify them, how they are shared, and how data is moved from one stage of development to the next, should be a company's top priority.

Why File-Based Data Management Blocks Collaboration

Despite what most file-based CAD vendors say in their marketing materials, 3D parametric CAD was not built with collaboration in mind when it was first introduced more than three decades ago.

The fundamental issue blocking collaboration with traditional CAD systems is that they only allow one person at a time to work on a file. If a second person tries to open the same file, a choice is offered to either open it as "read-only" or to make a file copy on-the-fly so that any changes do not affect anyone else. This, however, defeats the purpose of collaboration – as each person is working on different copies of different files.

The reason why files are locked when opened by an application is to prevent file corruption, conflicts, and lost work.

To avoid any such conflicts, individual design tasks can be assigned to different engineers working on the same project in an attempt to prevent anybody from working on the same files at the same time. However, all the changes made to each file must somehow be integrated into a master top-level assembly. This means that at some point – probably several times a day – somebody must open the top-level assembly to check that all the subassemblies and parts are behaving as expected and attempt to resolve any conflicts that arise.

If a file is saved before a design change is complete, the incomplete model geometry could negatively affect other parts of the assembly. Finding where things have gone wrong and who/what is to blame is not an easy task and it could be a complete waste of time and effort, especially if it resolves itself when the design changes are finished.

It's also impossible to know if somebody is editing a file, who that person is, or if all the files are saved and up-to-date – this means that any person who needs to access those files could be viewing incorrect data and all sorts of problems could result.

Exchanging product data with remote employees, contractors, suppliers, customers, or other third-party companies compounds these issues even further. If a partner is manufacturing your product, you need to be absolutely sure they have the latest versions of your design files. If a contract designer or a remote employee needs to make edits to the files, all the problems listed above also apply, only they become worse.

Any person or entity that does not have access to your company network must receive the data files by some other means. Common methods include email attachments, FTP sites and file-sharing services such as Dropbox, OneDrive or Google Drive, and all have pros and cons.

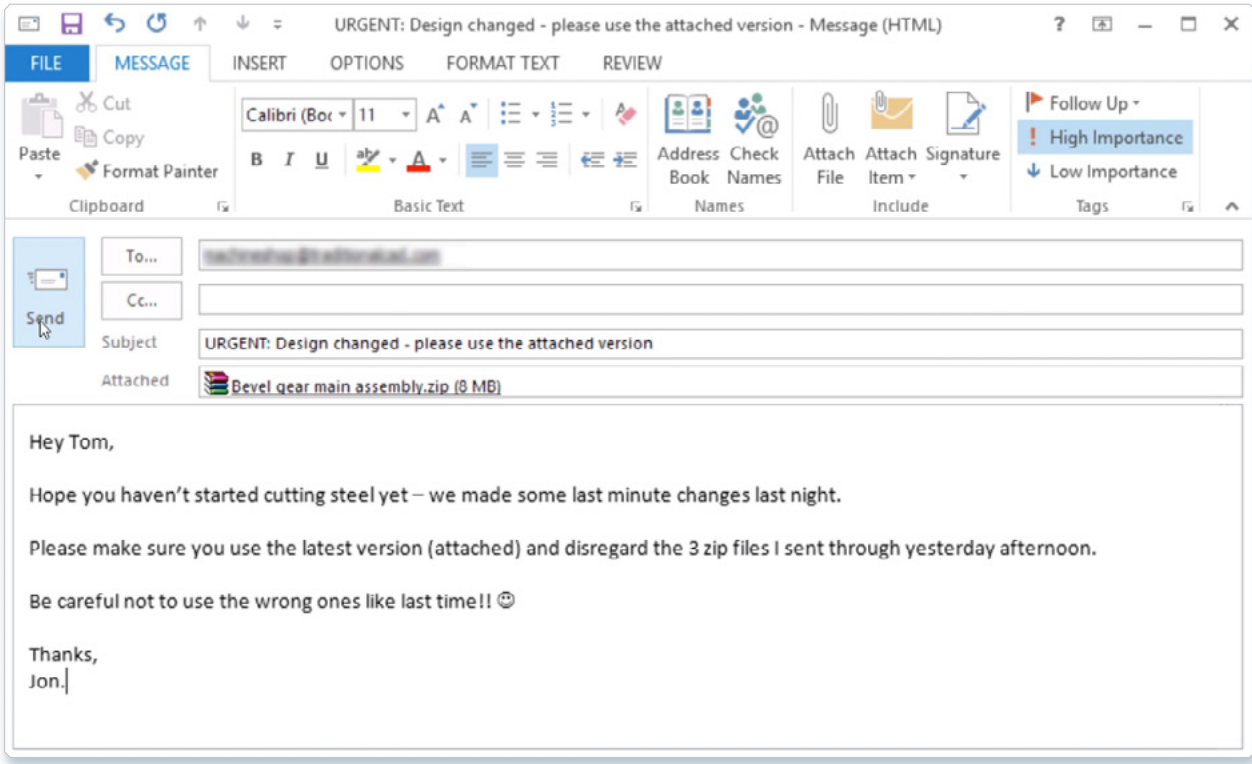

CONFUSING FILE COPIES - The more versions of your design that you send to an external partner, the more likely there will be confusion over which version is the latest and most up-to-date.

When using file-based CAD, there are serious concerns about security. Uncontrolled copies of your proprietary designs inevitably wind up stored on multiple computers in multiple locations with partners, manufacturers, vendors and suppliers. Once you email a design file "out in the wild," you really have no idea who has access to it.

File type and file version can also be an issue. If the recipient is not on the same version of the same software as you, then they will not be able to open the files. Therefore, you must ensure that the files you send are compatible with whatever system they use. If they only need to view the files, they will need to download and install compatible viewing software.

Once an external party has your files and they are able to open them and work on them, you can do nothing but wait until they have made their edits and have sent the changed files back to you.

Exchanging CAD files using manual methods is not scalable for large design teams or even smaller teams with multiple locations.

Each team may have their own processes and may rarely communicate with each other, leading to duplicate data, information silos and islands of automation. When several copies of the same part are spread across different systems at different locations and a change is required, it's virtually impossible to know which file is the master copy and who should be making the change. Design changes are often made to one copy, but not to others. Mistakes are easily made.

The importance of early collaboration with everyone in the supply chain cannot be stressed enough. Getting early feedback at every stage of the design helps companies to manage and reduce product-related costs, manufacturing defects, recalls, complaints, and risk.

All of the above issues underscore the need for good working practices and secure data management. The level of automation, management and security that is provided by the data management solution you choose depends upon which route you take.

onshape®

2 The Benefits of Data Management

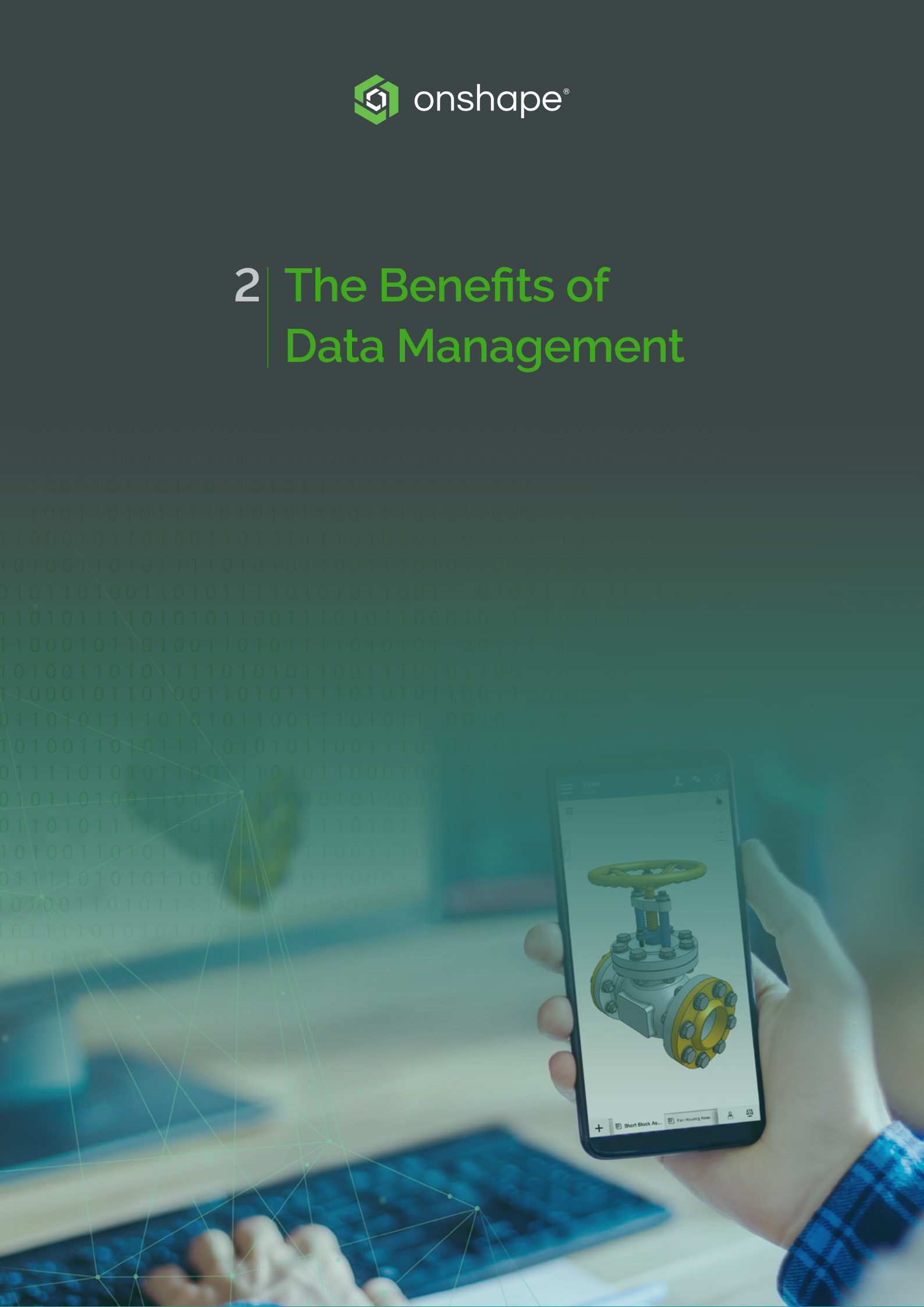

Does 3D CAD Really Need Product Data Management (PDM) Software?

The more players that are involved with a project – colleagues, partners, contractors and suppliers – the more complicated your data management challenges become. Complex assemblies, comprised of many part files, require a sound data management system to ensure efficiency and limit rework. In addition, data management solutions enable the user to reuse existing parts and assemblies rather than taking many hours to recreate them.

One of the key roles of Product Data Management software is to manage and organize the complex interdependencies that 3D CAD creates between each type of file, some of which may not be so obvious. Before diving into the details of data management, it's worthwhile to take a moment to explore how these interdependencies are created and the problems they can sometimes cause.

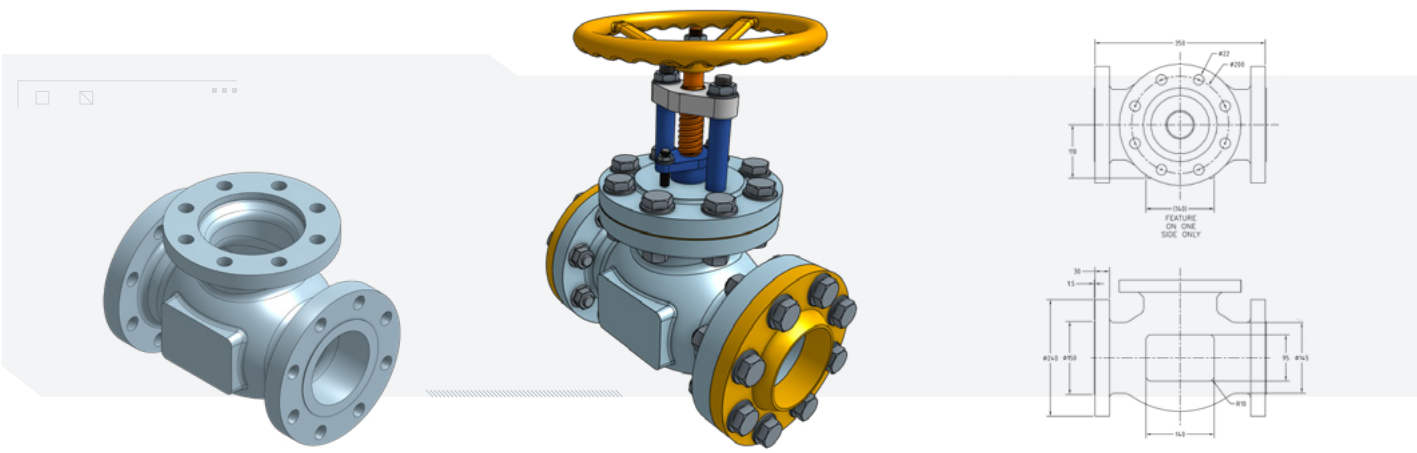

Each CAD design constructed is made with multiple part, assembly and drawing files:

- **A part file** is the basic unit that all other aspects of a parametric 3D CAD system rely upon. It contains the feature-by-feature definition of a model of a component that may later be used in an assembly or a drawing or some other downstream deliverable like simulation, CAM or rendering.
- **An assembly file** relies on a part file to provide the necessary geometry so that it can position it relative to other parts in the assembly.
- **A drawing file** relies on a part file to provide the necessary geometry to create drawing views and accurate measurements for dimensions and other annotations.

Neither an assembly file nor a drawing file contains the geometry required to accurately depict correct part geometry. Some systems may cache this data as a snapshot-in-time in the assembly or drawing file, mainly to enable viewing software to display the geometry without having all the files present. But cached data may be out-of-date, so it's a risk to rely on this information. Think of a drawing with cached data like a print – it could potentially be out-of-date the moment it is created, and it's almost impossible to tell if it is or not without further investigation.

Therefore, to depict the latest design accurately, an assembly or a drawing cannot truly exist without access to the required most current part files.

Carefully crafted parametric models can propagate changes quickly and effectively to all downstream deliverables such as assemblies and drawings. Unfortunately, very few parametric models are as resilient to design changes as they should be. A simple design change can have a severe domino effect.

Managing these interdependencies can only effectively be achieved using data management software. Vendor-supplied PDM software understands the data structures inside each file and knows which files are dependent upon others.

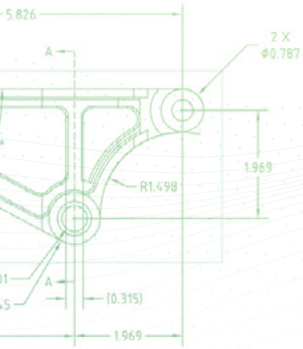

How Do PDM Systems Work?

Product Data Management software comes in many varieties and from many sources – for example, your CAD vendor or another third-party document management system – with varying levels of usability, flexibility and capability. Some have better integrations with other business systems, but the only one that truly understands your design data is the PDM system from your CAD vendor. These systems take full advantage of the data available from the CAD system, often have thin client add-ins that enable quick access to data structures and the complex references and interdependencies between parts in an assembly, and have the best ease of use (albeit training is usually required to get the full benefits).

A CAD file can contain any type of geometry, simple or complex. It also contains references to the interdependencies between each file and data about that file (called "metadata"), which contains properties such as name, description, material, part number and project name.

When a design is checked into the PDM vault, the highest-level object (usually an assembly) is opened and the data structure is interrogated. From this file, the PDM system will extract a list of each dependent subassembly or part file. Each of those files will then be opened in turn and their dependencies, such as drawings and other parts and assemblies, will be added to the assembly structure list and an accurate Bill of Materials (BOM) is created at the same time. This process will repeat itself until no further levels of dependency exist.

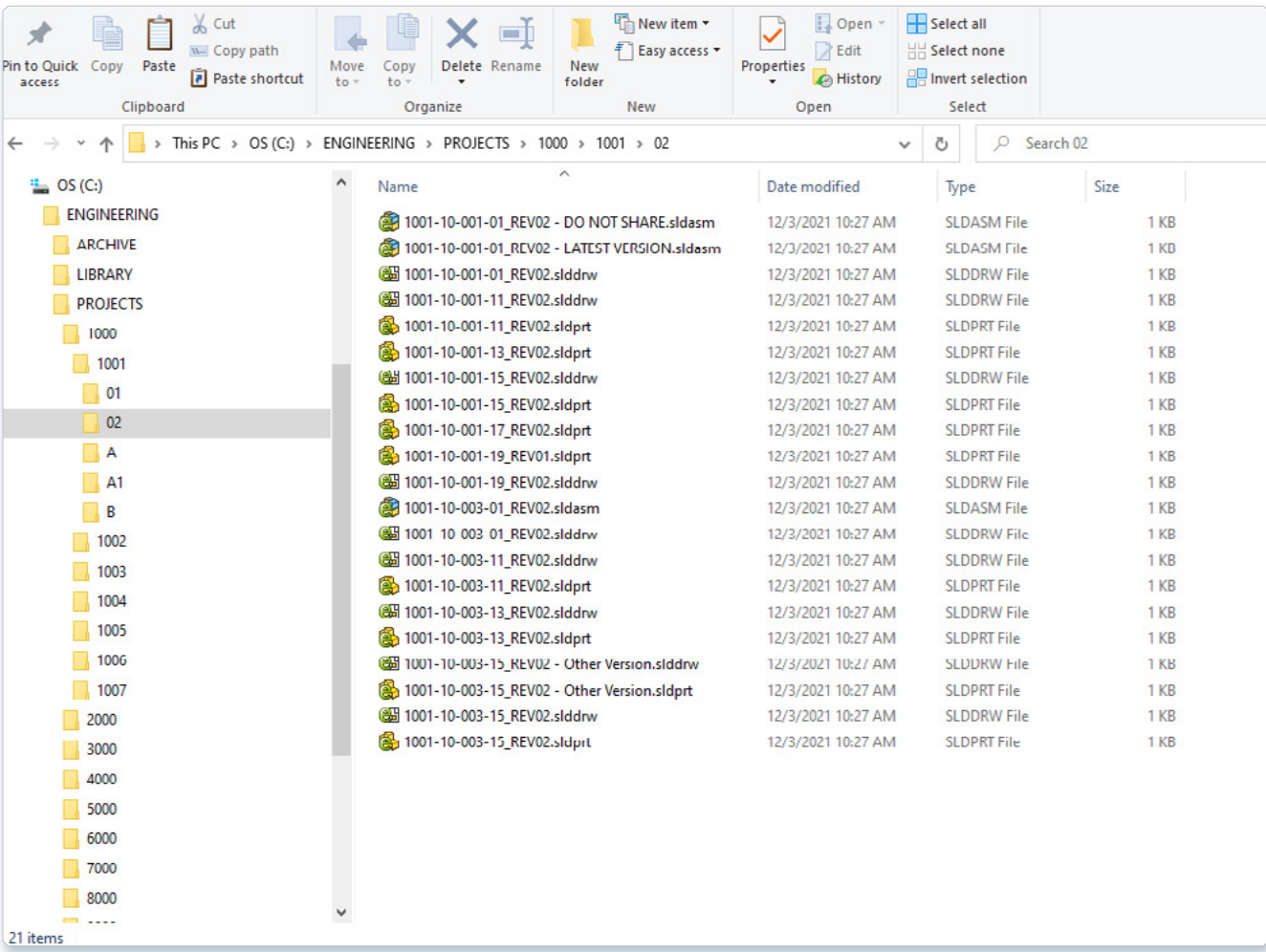

An example of a file-based assembly structure.

Assuming all the files can be located, they are then copied to a dedicated file server over the network and all the interdependencies and metadata are stored in tables in a Structured Query Language (SQL) database. The tables in this database are configured by the PDM software during installation to exactly match the metadata created by the CAD system. This enables data to be structured and categorized so that it can be indexed, searched and easily manipulated using SQL transactions.

For a CAD file, a table may state what type of file it is, where it is stored, list all of its custom properties and have links to the assembly or project that it belongs to. A simple SQL query is able to quickly find all the information about a file and its relational hierarchy to all the other files in your database.

Once the table structure has been defined, it is not easily changed. This causes an issue with the annual upgrade cycle of most CAD and PDM systems, in that data structure changes required to accommodate new CAD features often require changes to be made to the PDM database structure. CAD vendors, therefore, attempt to keep PDM system releases in sync with CAD releases (within maybe a week or two) to minimize the impact of the downtime that is imposed on their customers.

For large databases with many files, the data structure and file version upgrade process can take a considerable amount of time and IT resources. It is also not unusual for unknown errors and model failures to be introduced when CAD files are upgraded.

Third-party PDM systems are not able to keep up with these new encrypted data structures and often have to wait and react to changes within a CAD system's proprietary file format. New versions of third-party PDM systems are often delayed for several months after the latest release of the CAD tool, while the new file format is reverse engineered.

The Pros and Cons of Traditional PDM Software

According to The State of Product Development and Hardware Design 2021 industry survey, an astounding 4 out of 5 engineering and manufacturing professionals sometimes have trouble finding the correct product design data or accessing it at the moment they need it. Imagine another data-critical profession, like physicians or accountants, not being able to access the most up-to-date information needed to do their jobs! It would not be tolerated.

Up until very recently, file-based PDM systems (with their flaws and all) were considered the best solution for managing design data. Let's take a closer look at how these systems work.

Think of a PDM database like a library card system that keeps track of where files are kept and a brief summary of what each file contains. To find a file, you consult your index card to find where the file is stored on the network and then "check out" the file which copies it to your local hard drive. Just like a library book, once a file is checked out, it is no longer available to anyone else. You can still see the metadata (a set of data that describes and gives information about other data) and a view-only representation of the file, because the library card is always available and always kept in a central location, but the file itself cannot be copied for editing.

THE PDM VAULT

The files on the server and the library card system are password-protected to prevent unauthorized access. A user must first sign-in to the PDM system using their unique username and password before they can access any data. For this reason, a PDM system is often referred to as a "PDM vault" because of this extra layer of security.

> *However, once files are checked out of the PDM vault and copied locally to a user's hard drive, they are no longer secure.*

These files are now essentially uncontrolled and can be edited, copied or emailed, presenting a serious security loophole.

Once a file is copied and sent to a supplier, there's always the possibility that it could already be out-of-date and they could manufacture the wrong version of a part. The master copy of the data is still stored in the PDM vault, so at least that is safe (assuming it is regularly backed up). However, in terms of protecting your company's intellectual property, **the "PDM Vault" is not as secure as it seems**.

Checked-out files are locked by the PDM system to prevent others from checking them out, editing them and overwriting any changes made by other team members. Nobody can work on a file until it is checked back into the PDM system and unlocked. This mechanism ensures that those who have files checked out can be easily traced, files can be version-controlled and conflicts between design teams can theoretically be avoided.

But in practice, this becomes **more of an obstacle than a benefit** as locked files prevent others from working, resigning them to wait until the files are checked back in and unlocked before they can get edit access. This forces a serial design workflow, causing bottlenecks and unnecessary delays.

3 out of 5
on-premise PDM users say their software is "less user-friendly" than expected

1 out of 2
on-premise PDM users say their software is "cumbersome" and leads to delays in the design process

nearly half of
on-premise PDM users say their software only "replaced one problem with another problem"

Source: The State of Product Development and Hardware Design 2021

So despite 85 percent of file-based PDM users stating their software does prevent version control problems, this benefit comes at a great productivity cost.

It is typical for a checked-out file to remain so for some time as the designer continues to make changes. During this time, nobody in the company can see the design changes and how much progress is being made. Only once the file has been checked back in, is it visible to others.

Constantly checking files in and out of the vault is considered a major hassle by most product developers. It requires the designer to stop what he or she is doing and run the check-in process, which can take several minutes depending upon the system requirements and the size of the files being copied. These stringent procedures interrupt a designer's train of thought, so they are generally avoided whenever possible.

THE RISK OF OVERWRITING PREVIOUS DESIGN WORK

Between check-ins, the file is not only uncontrolled, but it may also go through several design iterations and complex edits. The designer typically waits until he or she is satisfied that the design is at a stage where it should be versioned and stored safely in the vault. Previous iterations, meanwhile, may be lost forever. If the designer decides that no changes are necessary, the lock can be removed from the file in the vault and a copy of the file will remain on the designer's local hard drive. At this stage, the product development team must be careful to ensure that further changes to the local file are not made while the file is unlocked in the vault.

> Otherwise, all changes could be wasted if the file is checked out again as the local file is overwritten.

Lost design iterations can be avoided if the file is checked back into the vault on a regular basis, but this workflow is not conducive to design exploration. It takes too much time. When inspiration for a new idea or better solution strikes, it is always while trying to solve a current design problem. The designer then goes off on a tangent with ideas of how to make it better, making drastic modifications to several parts and assemblies, only to realize later that the first idea was far superior. But if the file wasn't saved or checked into the vault, the original idea and inspiration has disappeared forever.

This technique has one major flaw – you might be saving bad work over good. Once you hit "Save," you can never go back to a previous design idea.

While PDM systems are good at recording milestones in a project, they are of little practical use when designing in CAD – as there is no security or data recording available when a file is checked out. Managers and executives are able to see who has a file checked out, but they are not able to see how a design is progressing.

There are many benefits to a carefully deployed data management solution. There are also many downsides that are not so obvious (and not usually brought to your attention by CAD vendors). The issues mentioned above apply to all file-based CAD and PDM systems and cannot be avoided.

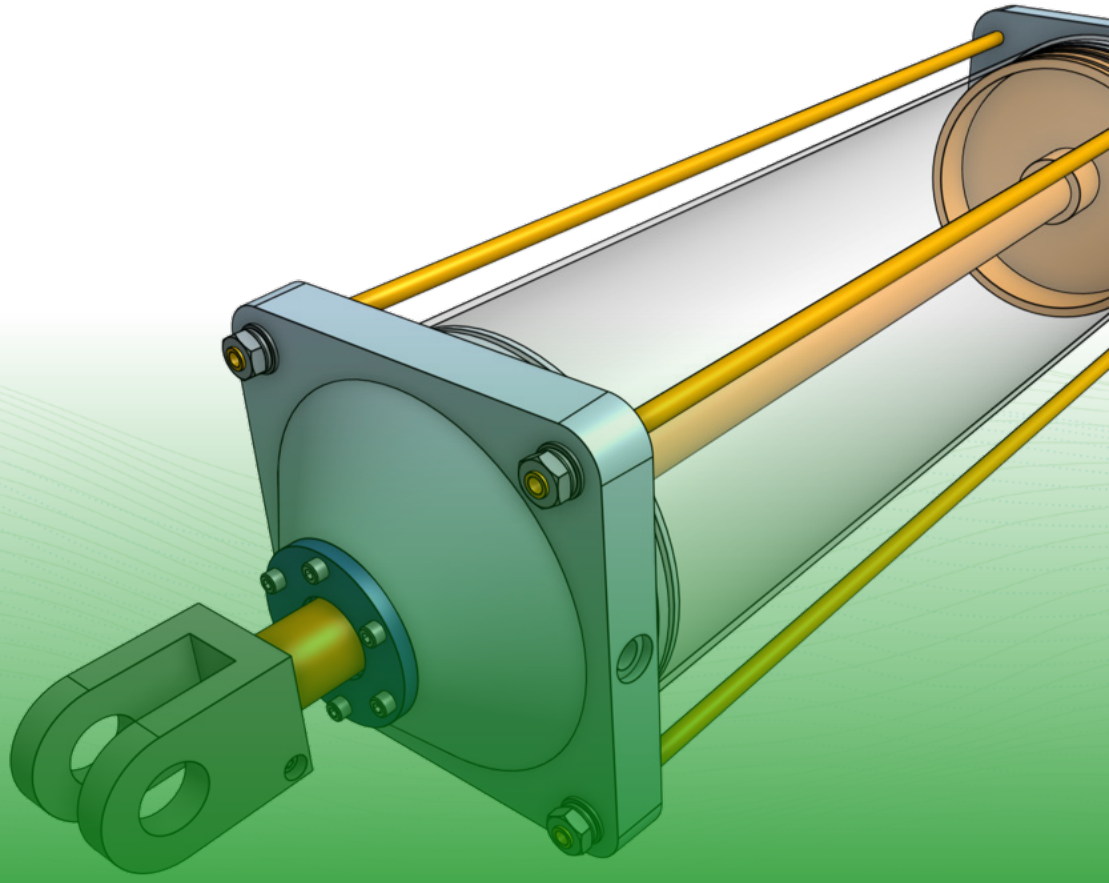

onshape®

3 The Cloud-Native Alternative to Traditional PDM

Implementing a PDM strategy is not only time-consuming for project managers, but also for every other stakeholder who needs to find the necessary resources to see the project through. When evaluating data management software, understanding how a specific PDM solution impacts your business and your processes is far more important than checking off a list of PDM capabilities.

One of the biggest and most costly mistakes made while implementing a PDM system is trying to map current business processes to an off-the-shelf data management solution. This approach will likely lead to disappointment or a hefty consultant's bill for a time-consuming implementation.

Just because a specific process has always been used, doesn't mean that it should continue to be used with a new tool. Many data management tools have workflows that will address most of the design processes you currently employ, and some will do things differently. It's best to regard this as an opportunity to re-engineer your business processes if a particular workflow makes more sense.

While not an exhaustive list, below are the minimum requirements you should consider for any Product Data Management system:

- ☑ Installation, Setup and Maintenance
- ☑ Security
- ☑ Engineering Document Control
- ☑ Search
- ☑ Version Control
- ☑ Revision Control and Approval Workflows
- ☑ Automatic Part Numbering
- ☑ "Where Used" Reports
- ☑ Effective Collaboration
- ☑ Engineering Change Orders (ECOs)
- ☑ Bill of Materials (BOMs)
- ☑ Integration with Enterprise Resource Planning (ERP)
- ☑ Real-Time Analytics
- ☑ Automated Backups and Disaster Recovery

Why Cloud-Storage PDM Solutions Are Still Ineffective

The best data management tools are the ones you never have to think about or see – they quietly go about their important tasks in the background without getting in the way of anyone or the design project. Cloud-native data management tools go a long way towards fulfilling this promise by eliminating long drawn-out installations, configurations, and day-to-day maintenance activities.

There are several methodologies available today that make use of the cloud. The cloud is, after all, just banks of computers hosted in a remote facility and maintained by a third party. So, whatever can be achieved by locally installed software can be replicated in the cloud, right?

This statement is not entirely true because there is one vital element missing: **How does a remote computer in the cloud access the files on your hard drive while maintaining strict security protocols to protect your intellectual property?**

The answer is: It can't.

There must be a mechanism to upload and download data to and from the cloud.

Popular cloud storage and file-sharing services such as Google Drive and Dropbox enable you to automate the task of data transmission by installing some proprietary software components on your computer. These services will designate certain folders on your hard drive to be a replica of some or all of the data you have stored in the cloud. Whenever a file is changed and saved to one of these folders, it is automatically uploaded to the cloud, versioned, and propagated to every user with whom the file has been shared. Everybody always has access to the latest version of the file.

However, cloud file-sharing services do not work so well when teams of designers need to work on the same projects – there's no way of knowing if somebody else is editing their locally synced copy of the master CAD file. Two or more people could be editing the same CAD file and now the "last save wins."

There are several dedicated cloud PDM solutions that use a similar mechanism of data transmission, but which also enable file-locking in their local clients. This works in a similar way to locally installed PDM – data is checked out, in this case from a web browser, and downloaded to your local hard drive. The files can then be locked if they are being edited to let the rest of the team know that the files are being worked on. Some systems obfuscate the file name and place them in an obscure location on your hard drive, but most do not. Either way, there are hundreds of files strewn across dozens of computers that can be copied at will. This not only represents a huge security threat, but also risks files being taken outside of the PDM ecosystem.

Putting Data Management First: The Onshape Way

Onshape is the only cloud-native product development platform that combines powerful CAD tools with built-in data management, collaboration, and business analytics. The biggest difference being that it was built from the ground up as a data management solution first and then the design tools were added on top, not the other way around as is common with most other data management systems.

Another important distinction is that Onshape does not use files, which immediately negates the most frustrating issues associated with CAD and PDM. It also does not use a relational database to store design data as other PDM systems do.

A relational database (sometimes called an SQL database because of the transaction language used to add, edit, delete, and find data) stores metadata in fixed tables with rigid schemas and pointers linking multiple tables together. This limits what the database can do, but also the type of data that it can store.

Onshape uses a document-oriented (NoSQL) database model which supports any type of data in any format with completely flexible schemas. It is a highly performant and distributed non-relational database, the type that is used in big data applications and other processing jobs involving data that doesn't fit well in a rigid relational model. Instead of using tables and rows like relational databases, a non-relational database architecture is made up of collections and documents.

A "Document" in Onshape is an arbitrary collection of parts, assemblies and drawings, plus any other project-related data (such as images, videos, PDFs, etc.). Since design data cannot exist outside of the database, things like security, version control, lost references, crashes and corrupted data are **never** an issue. This fundamental architectural difference is what enables real-time collaboration, simultaneous editing, instant and secure sharing, version control and release management. No other product development platform has this level of capability with this level of flexibility.

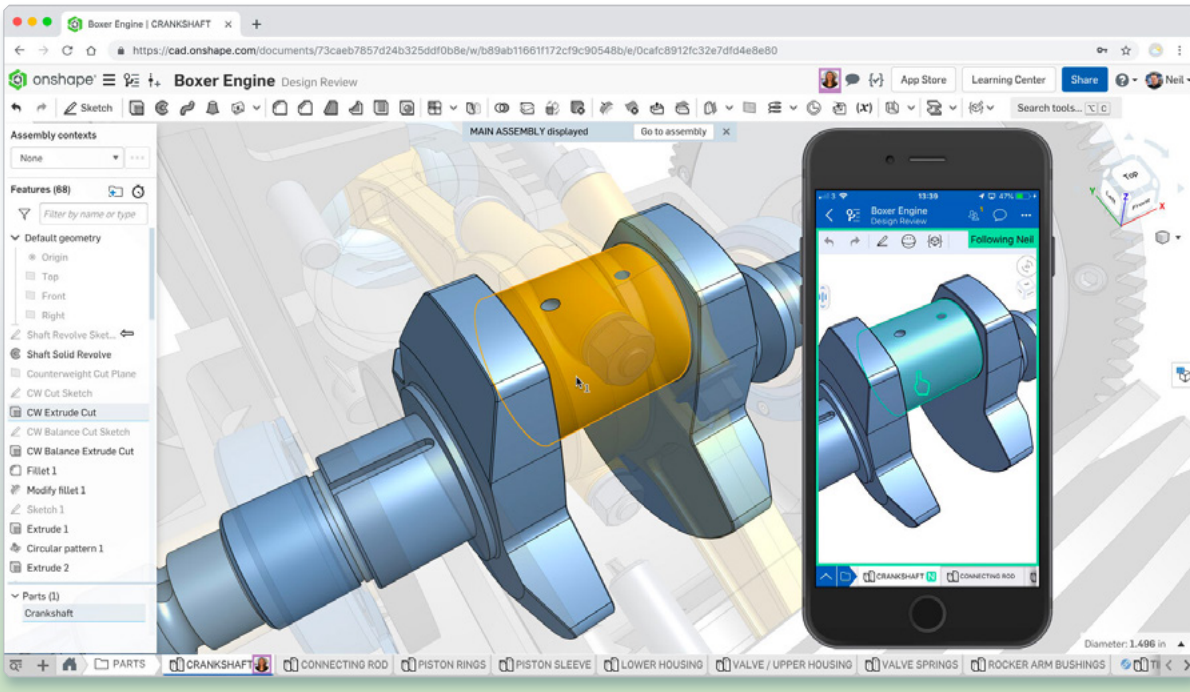

Onshape's cloud-native product development platform includes real-time collaboration tools that allow engineering teams to instantly see design changes and enable them to quickly explore alternative ideas.

Does 3D CAD Really Need Data Management Software?

Here are the benefits of cloud-native Onshape's built-in data management that just aren't possible with file-based CAD and PDM:

- **Simultaneous Editing** – The entire design team can simultaneously work on the same project, same assembly, same part and even the same sketch. Whenever one person on the team makes a design change, everyone else instantly sees it. In the cloud, teams can co-design complex parts and assemblies without having to be physically in the same location.

- **Nothing is Ever Locked** – All design activities are carried out in parallel – as changes are made, every action is recorded in the database and instantly updated wherever it's used. There's no "Save" button, no check-in/check-out, no accidental overwrites, and no waiting around for someone else to finish their work before you can start yours.

- **Unlimited Undo/Redo** – Since every design change is recorded, Onshape offers unlimited undo/redo capabilities and a complete audit trail of who did what and when, making it much easier to revert back to any earlier stage of the design without requiring rework.

- **Engineering Change Orders** – Onshape enables multiple ECOs to be worked on simultaneously. Any number of sandbox environments, called branches, can be created to carry out ECOs, design explorations, or any activity where the main design should not be affected. A branch can be created from the same revision of the design that the ECO was raised against, so you can be sure you're editing the right data. Each branch can then be compared (to check for conflicts) and, once approved, merged back into the main design and up-issued.

- **Customized Workflows** – Built-in release management and approval workflows can be customized to address most companies' business processes. Parts, assemblies, drawings, individual configurations and any other project-related data can be independently revision controlled following a predefined release schema. Multi-tier and multi-approver workflows provide notifications to designated individuals who can review and sign-off designs from any computer or mobile device without having to install any software

- **Real-Time Business Analytics** – In addition to the complete design history captured in each Onshape Document (detailing who made what changes and when), Onshape's Enterprise platform records project details, duration, release status, team activity, supplier access, and more in real time. In short, any activity that touches your data is logged and presented in easy-to-read graphs, tables, and charts. These graphical representations provide complete visibility into who did what and when, and how engineering efforts are trending over time, enabling you to identify potential bottlenecks earlier and intelligently allocate resources as needs evolve.

- **Secure Sharing of Designs** – Sharing data with colleagues, suppliers and customers is simple and secure. No design data ever leaves Onshape's servers. All you need to do is to enter a person's email address, set view or edit permissions and press "Share." Clicking on the email link will open your design in a web browser or a mobile device. No software or downloads are required. This enables design teams to work together from anywhere and design reviews can be carried out in real time on any device. Everybody works on the exact same Document, not different copies of the data.

- **Data Backup and Recovery** – All design data is backed up automatically every three hours and subjected to integrity tests at least every three weeks. Every edit made to an Onshape Document is replicated across multiple, geographically separated data centers in a matter of milliseconds. **If something were to happen to one of the data centers, another one would take over immediately without you even noticing**. In addition, Onshape's security and data protection measures are far superior to anything that any one company could implement (or afford) on its own.

If you'd like to stop thinking about data management and spend more time designing, request a free Onshape Professional Trial by clicking the button below.

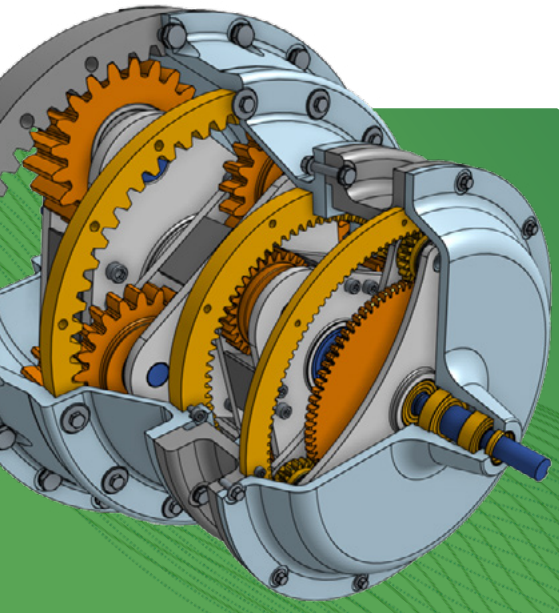

Sign up for a Free Onshape Professional Trial

and experience the benefits of cloud-native product design today!

Get Started →